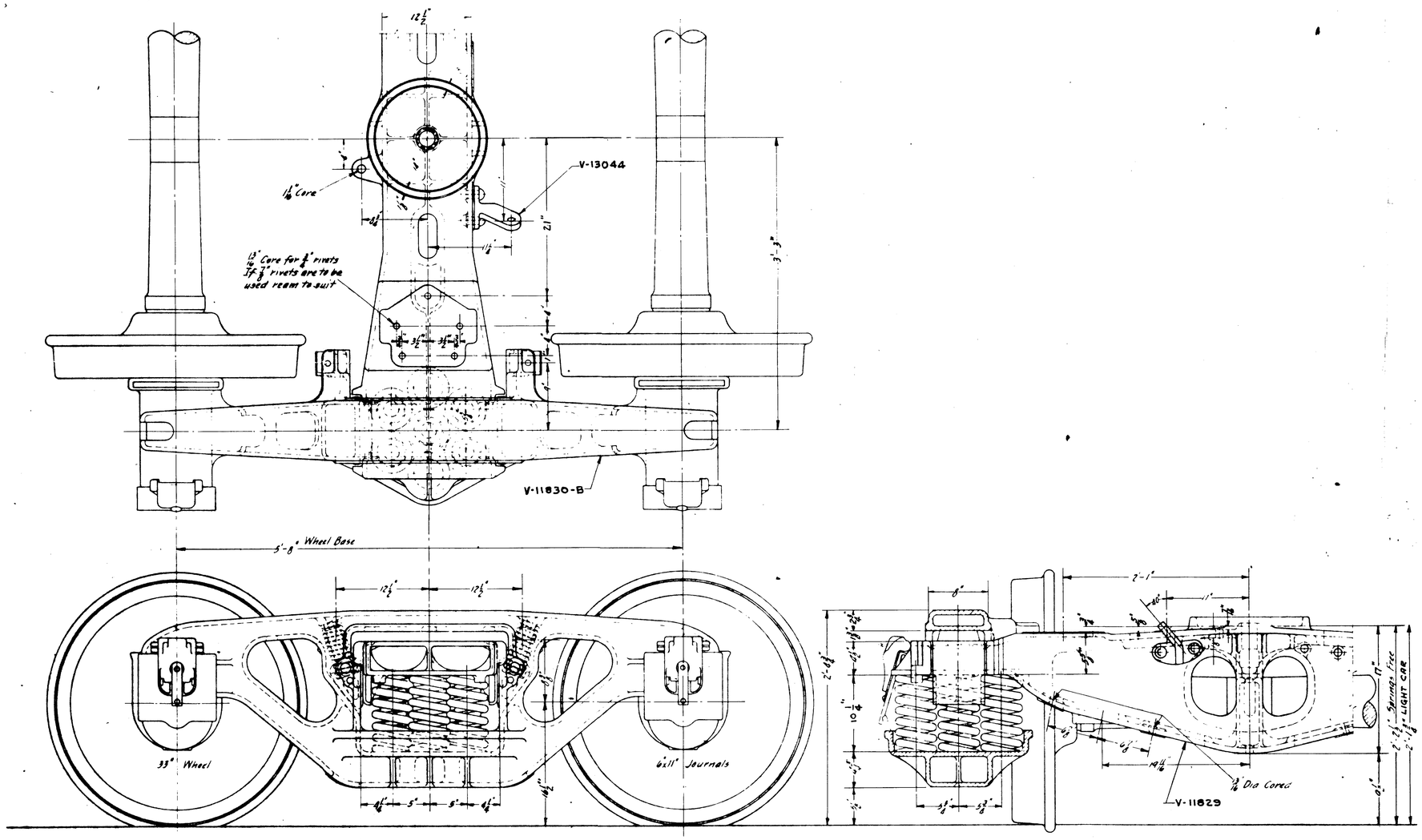

DET. NO.	NO. REQ'D	DESCRIPTION	MATERIAL

86

LETTER	ISSUE
A	

CARS-G32, G33

CLASS-2E-F25

THE PENNSYLVANIA RAILROAD
PHILADELPHIA, PENNSYLVANIA

FREIGHT CARS TRUCKS ARRANGEMENT

C
462213

CHIEF MECHANICAL OFFICER — MECHANICAL ENGINEER

OR C.E.M. — CH R.L. — A — DATE 6-29-62

TOLERANCE UNLESS OTHERWISE SPECIFIED

SCALE-1½"=1'-0"

REF. DWG. NATIONAL MALLEABLE AND STEEL CASTINGS CO. DWG. Nº. 34208-B

COLLECTION OF JIM KINKAID
DOWNLOADED FROM HTTP://PRR.RAILFAN.NET