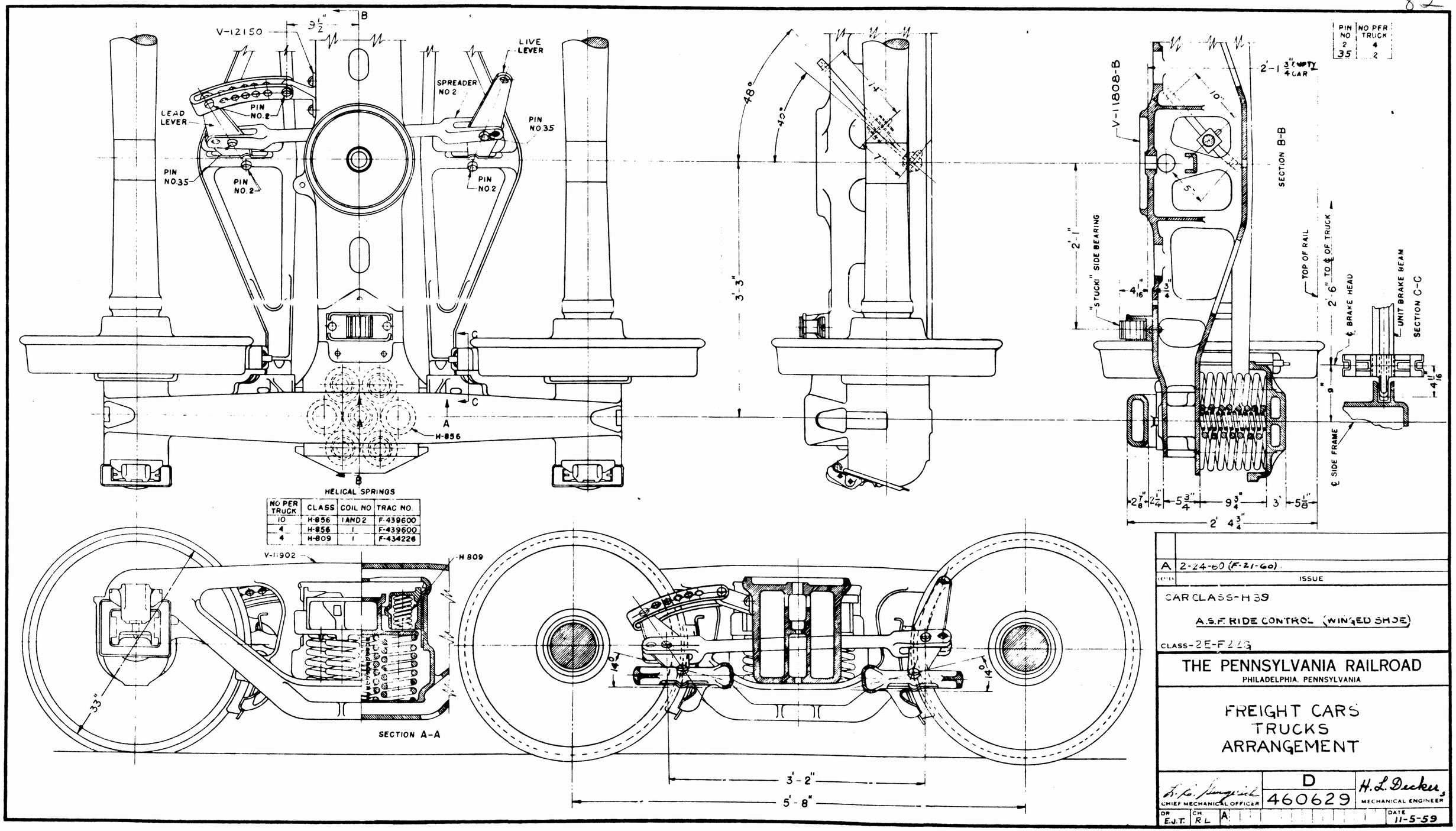

NO PER TRUCK	CLASS	COIL NO	TRAC NO.
10	H-856	1 AND 2	F-439600
4	H-856	1	F-439600
4	H-809	1	F-434228

PIN NO	NO PER TRUCK
2	4
35	2

LETTER	ISSUE
A	2-24-60 (F-21-60)

CAR CLASS-H 39

A.S.F. RIDE CONTROL (WINGED SHOE)

CLASS-2E-F223

THE PENNSYLVANIA RAILROAD
PHILADELPHIA, PENNSYLVANIA

FREIGHT CARS
TRUCKS
ARRANGEMENT

R. F. Pengrick
CHIEF MECHANICAL OFFICER

D
460629

H. L. Deckes
MECHANICAL ENGINEER

DR E.J.T. | CH R.L. | A | DATE 11-5-59

COLLECTION OF JIM KINKAID

DOWNLOADED FROM HTTP://PRR.RAILFAN.NET