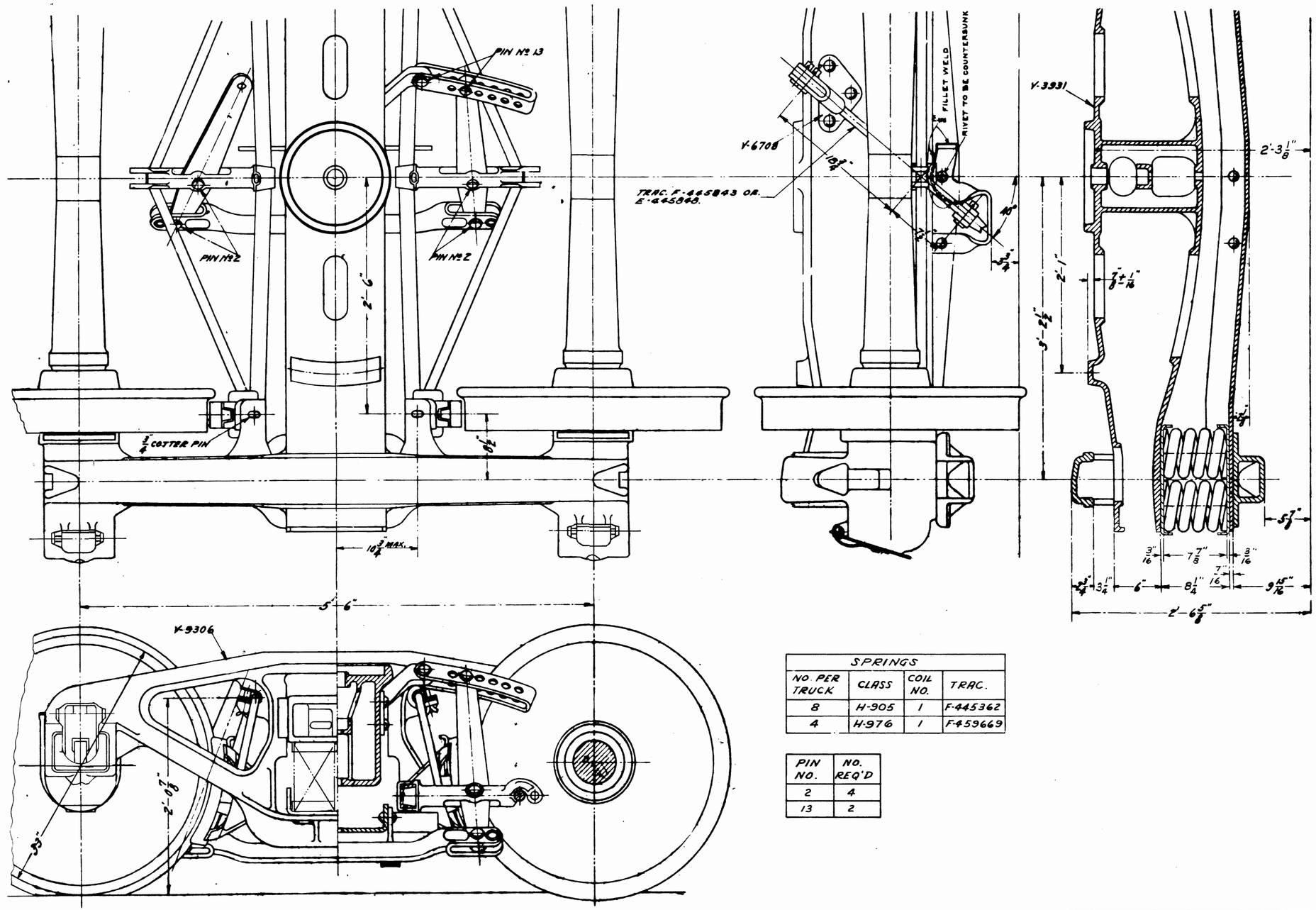

SPRINGS			
NO. PER TRUCK	CLASS	COIL NO.	TRAC.
8	H-905	1	F-445362
4	H-976	1	F-459669

PIN NO.	NO. REQ'D
2	4
13	2

DET. NO.	NO. REQ'D	DESCRIPTION	MATERIAL

LETTER	ISSUE
A	3-20-61

CARS: K9, K9A, K9B, K11
HOLLAND STABILIZER RS-2-C

CLASS- 2D-F8E

THE PENNSYLVANIA RAILROAD
PHILADELPHIA, PENNSYLVANIA

FREIGHT CARS
TRUCKS
ARRANGEMENT

L. E. Gingrich — CHIEF MECHANICAL OFFICER
D 461654
H. S. Decker — MECHANICAL ENGINEER

DR. FLR | CH. R.L. | A | DATE 3-10-61

TOLERANCE UNLESS OTHERWISE SPECIFIED

SCALE - 1 1/2" = 1'-0"

COLLECTION OF JIM KINKAID

DOWNLOADED FROM HTTP://PRR.RAILFAN.NET

VAN