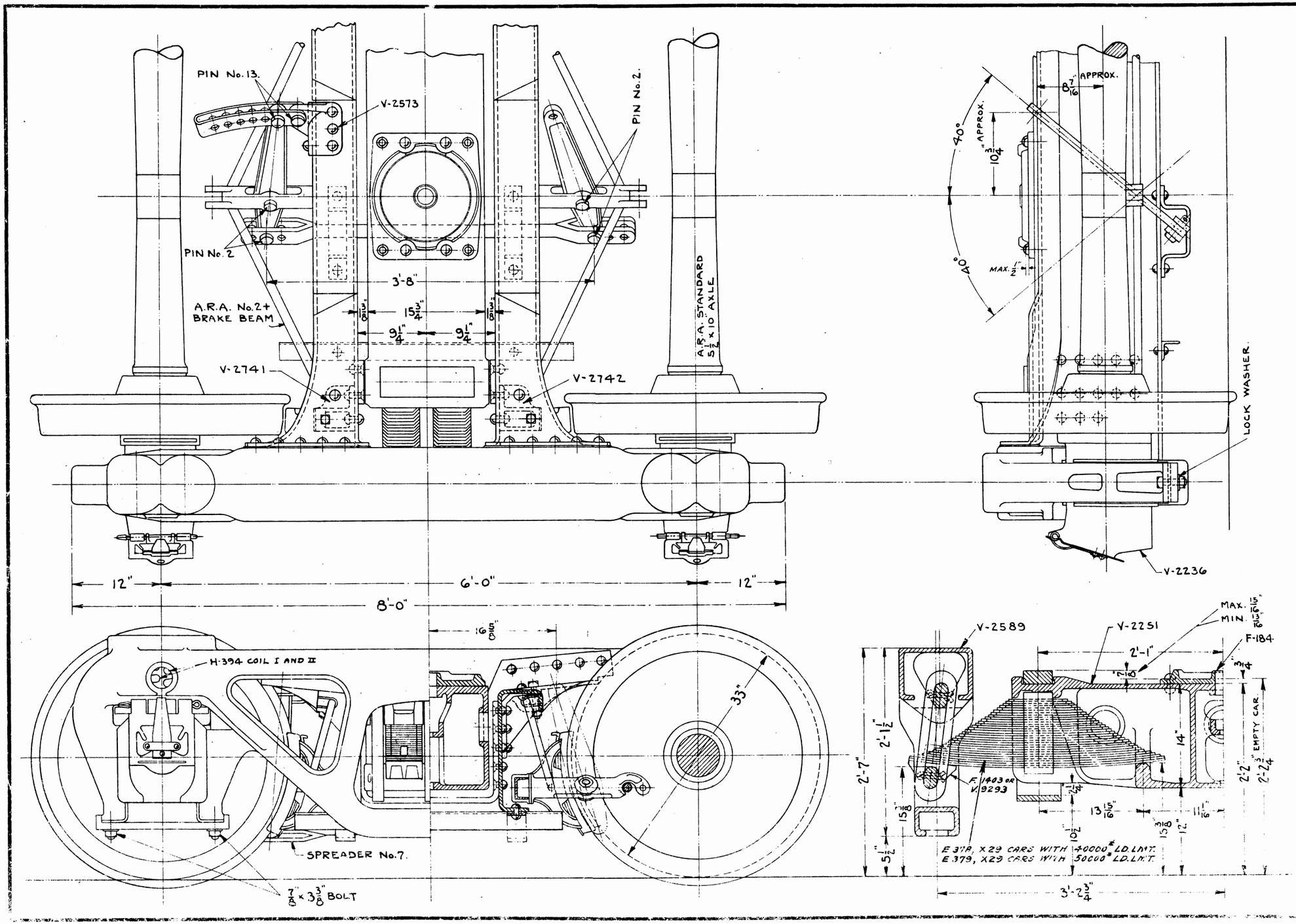

ELLIPTICAL SPRINGS CHANGED FROM E 360 TO E 378 OR E 379. 8-26-1927

THE FOUR OUTER RIVETS IN CENTER PLATE HAVE BEEN FLATTENED TO A HEIGHT NOT EXCEEDING 1/2" 8-17-1933 (F-46-37)

SUSPENSION SPRING HAS BEEN REMOVED AND SAFETY SUPPORTS FOR BRAKE BEAM AND SPREADER SHOWN. 7-20-1942 (F-51-42)

ISSUED - 6 - 23 - 1926 A
REISSUED - 8 - 26 - 1927 B
" 8 - 17 - 1933 C
" 7 - 20 - 1942 D

PATENT No 1649352

2D-F7

THE PENNSYLVANIA RAILROAD
FREIGHT CARS
TRUCK
A.R.A. No. 1
ALTOONA, JUNE 15
CIRCUIT OF ACTIVE POWER
80765

COLLECTION OF JIM KINKAID
DOWNLOADED FROM HTTP://PRR.RAILFAN.NET