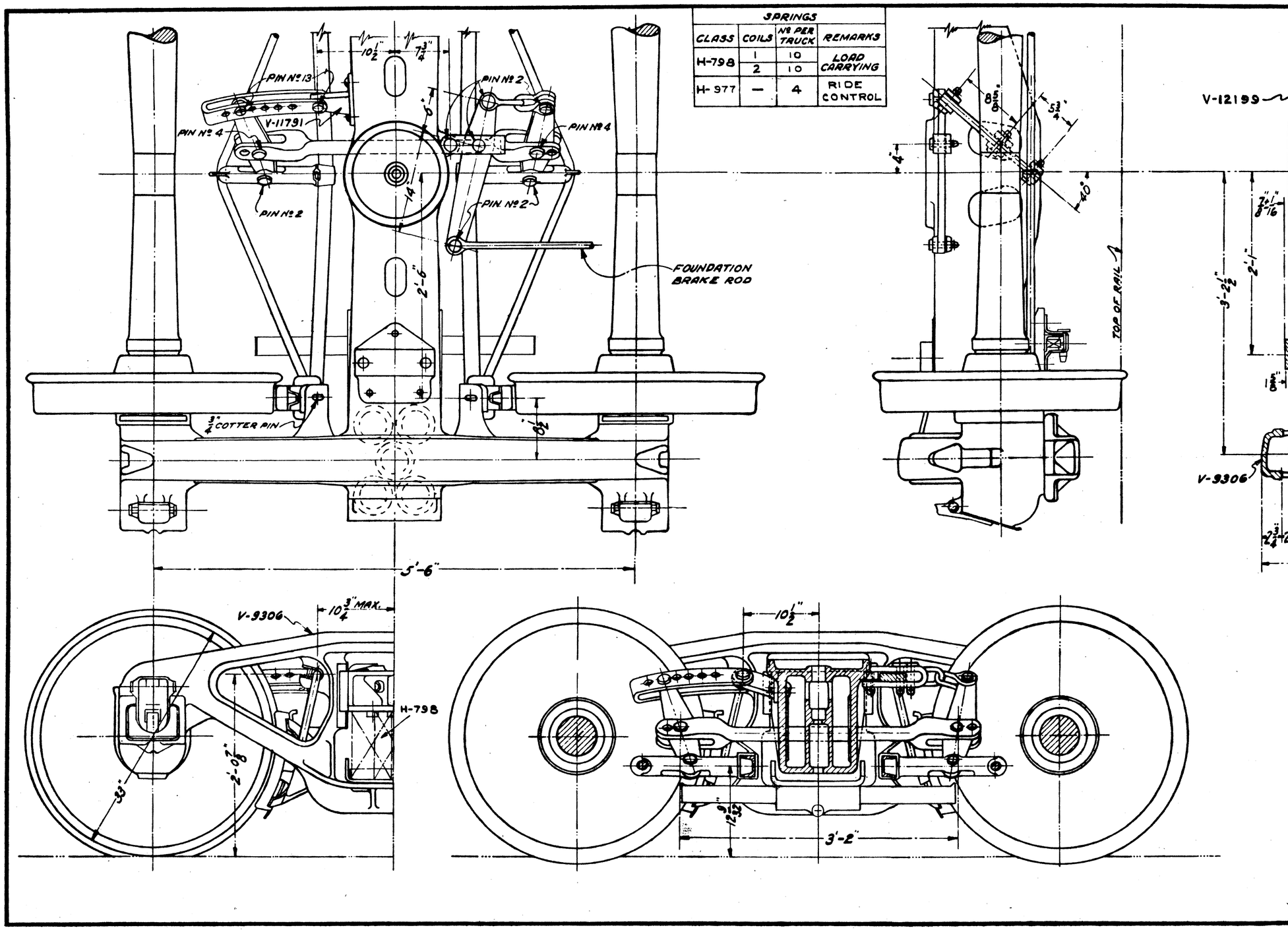

SPRINGS			
CLASS	COILS	Nº PER TRUCK	REMARKS
H-798	1	10	LOAD CARRYING
	2	10	
H-977	—	4	RIDE CONTROL

PIN Nº	Nº PER TRUCK
2	7
4	2
13	2

A 6-9-59
LETTER ISSUE

FOR X50A, X50B, X51E CARS

CLASS- 2D-F19M

THE PENNSYLVANIA RAILROAD
PHILADELPHIA, PENNSYLVANIA

FREIGHT CARS
TRUCKS
ARRANGEMENT

L. E. Fingerich
CHIEF MECHANICAL OFFICER

D
459790

W. S. Decker
MECHANICAL ENGINEER

DR. E.J.T. CH. R.L. A DATE 4-29-59

COLLECTION OF JIM KINKAID

DOWNLOADED FROM HTTP://PRR.RAILFAN.NET