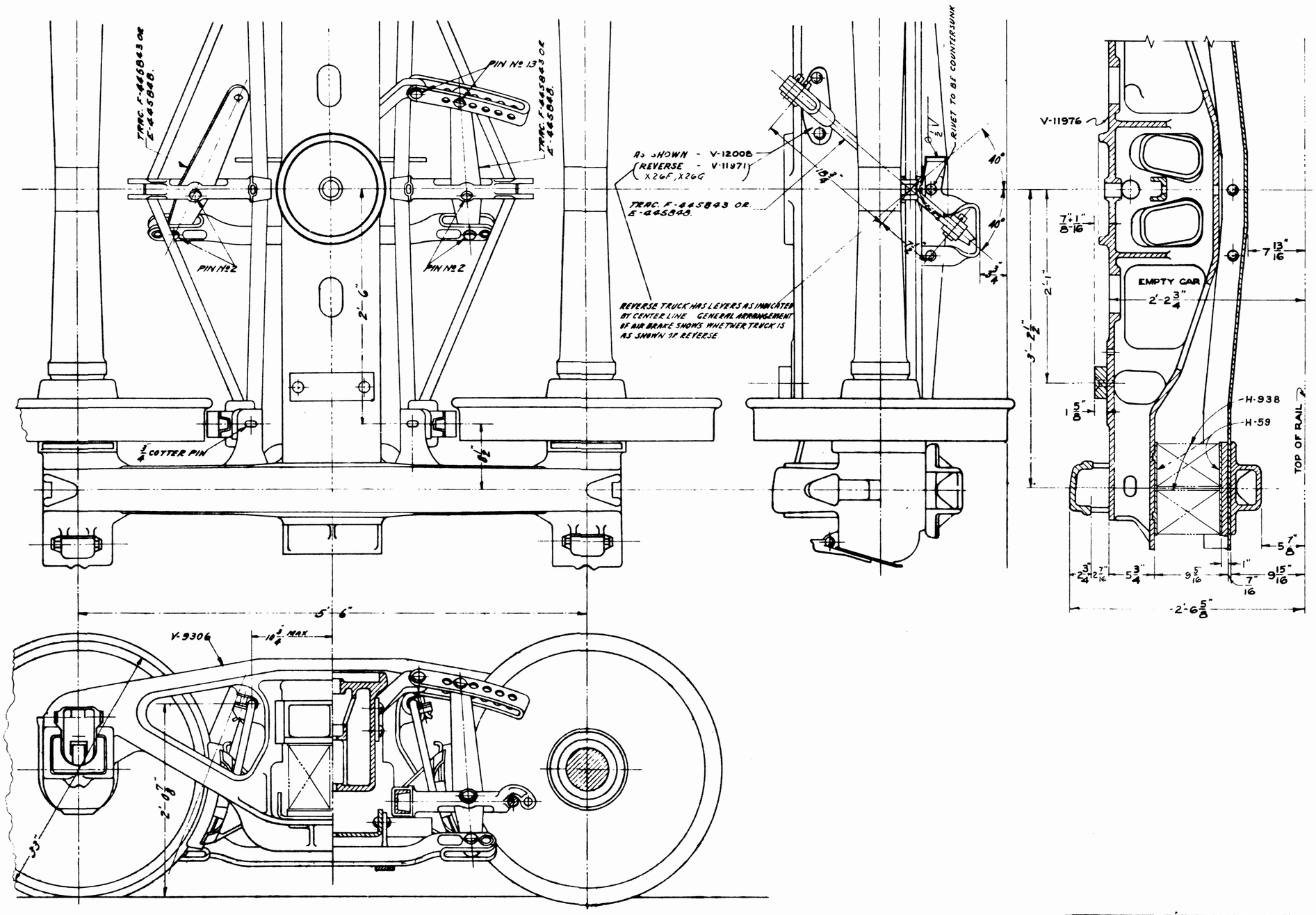

DET NO.	NO. REQ'D	DESCRIPTION	MATERIAL

LETTER	ISSUE
B	X26G REMOVED. 7-5-62 GEM
A	10-3-61

CAR CLASSES: X26F,

CLASS- 2D-F12E

THE PENNSYLVANIA RAILROAD
PHILADELPHIA, PENNSYLVANIA

FREIGHT CARS TRUCKS ARRANGEMENT

D
461882

CHIEF MECHANICAL OFFICER — MECHANICAL ENGINEER

TOLERANCE UNLESS OTHERWISE SPECIFIED

SCALE - 3/4" = 1'-0"

DR. FLA | CH. R.L. | A | B | DATE 9-27-61

COLLECTION OF JIM KINKAID

DOWNLOADED FROM HTTP://PRR.RAILFAN.NET