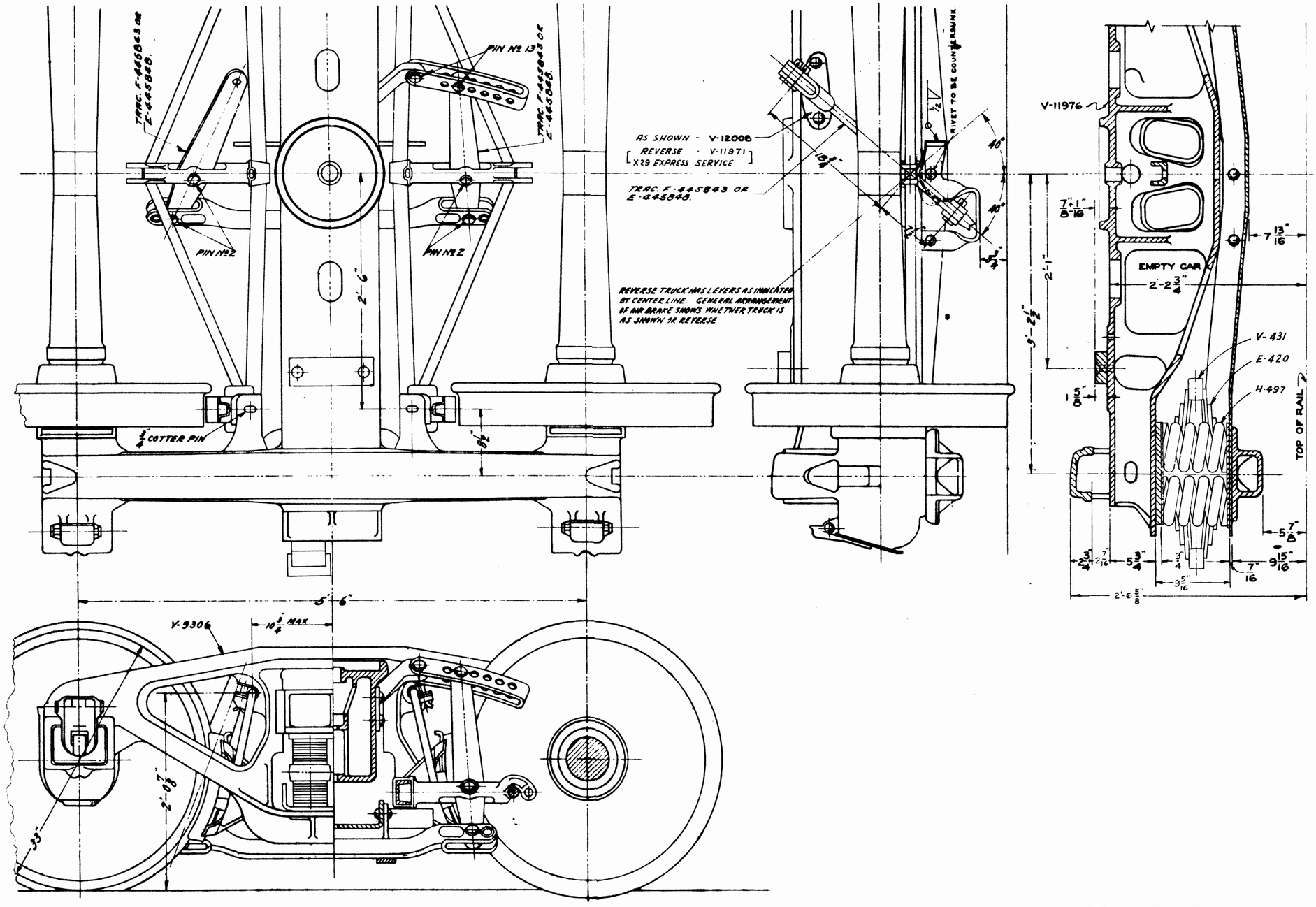

DET NO	NO REQ'D	DESCRIPTION	MATERIAL

LETTER	ISSUE
A	10-11-61 (F-57-61)

CAR CLASSES: X29 EXPRESS SERVICE

CLASS- 2D-F12D

THE PENNSYLVANIA RAILROAD
PHILADELPHIA, PENNSYLVANIA

FREIGHT CARS TRUCKS ARRANGEMENT

CHIEF MECHANICAL OFFICER		MECHANICAL ENGINEER
	D 461887	

DR. FLA CH. R.L. A DATE 10-3-61

TOLERANCE UNLESS OTHERWISE SPECIFIED

SCALE - 1 1/2" = 1'-0"

COLLECTION OF JIM KINKAID

DOWNLOADED FROM HTTP://PRR.RAILFAN.NET