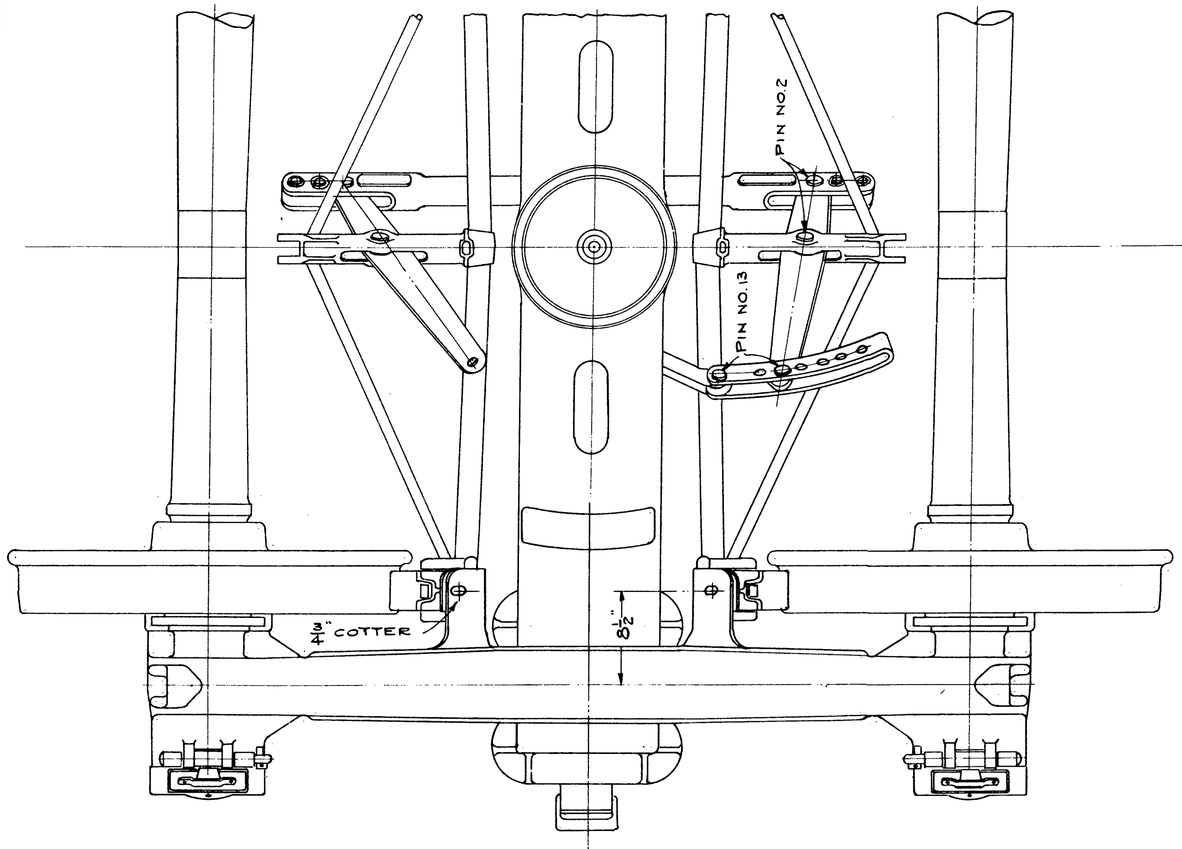

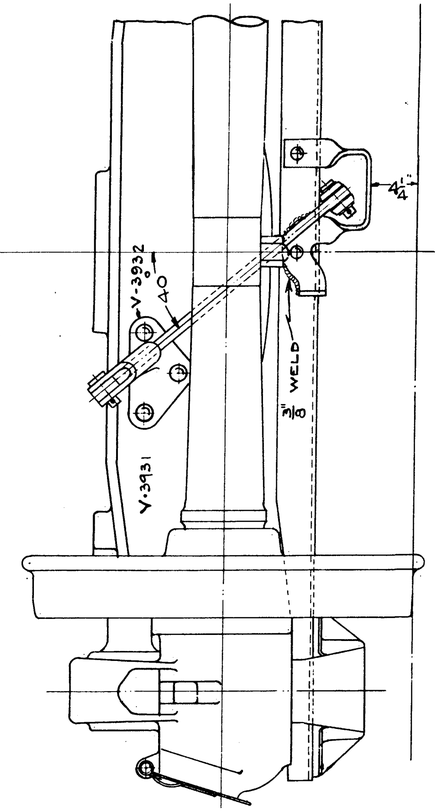

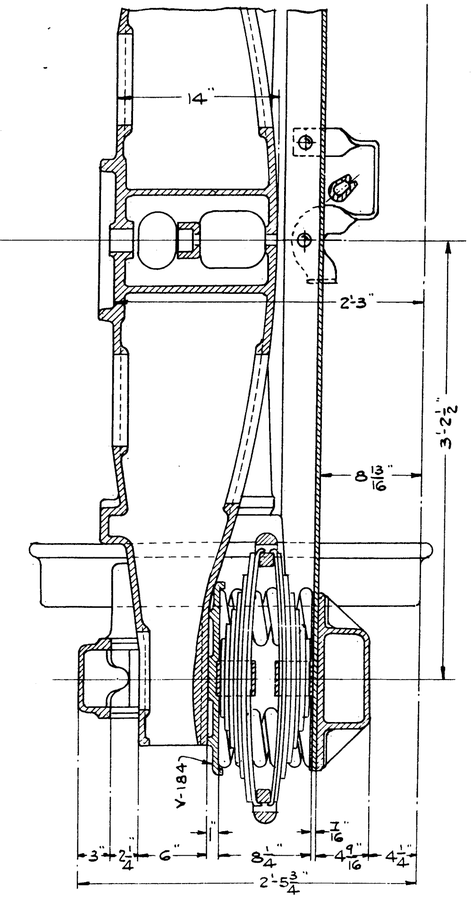

SAFETY SUPPORT HAS BEEN SHOWN
WELDED AT CENTER OF SPRING PLANK.
5-14-1936. (F.20-36)

ISSUED:- 1-29-1932 A.
REISSUED. 5-14-1936. B. G.E.K.

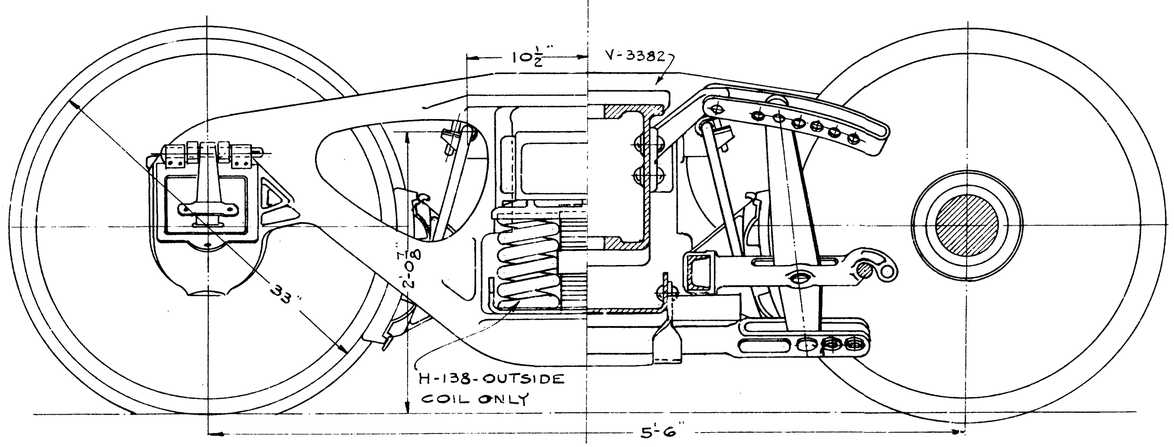

2D-F10

THE PENNSYLVANIA RAILROAD

FREIGHT CARS

TRUCKS

ARRANGEMENT

ALTOONA 1-28-1932

CHIEF OF MOTIVE POWER | D 98090 | MECHANICAL ENGINEER

J.T.S. F.H.P. AB

COLLECTION OF JIM KINKAID

DOWNLOADED FROM HTTP://PRR.RAILFAN.NET