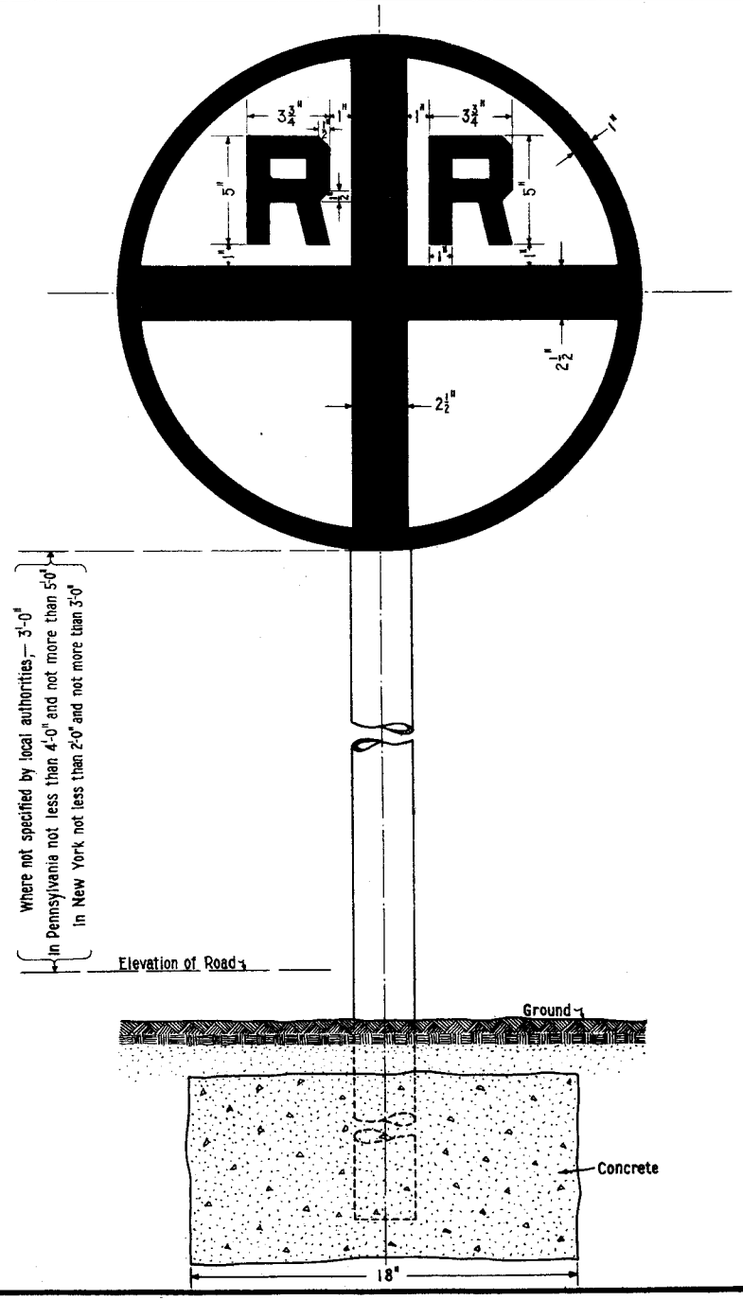

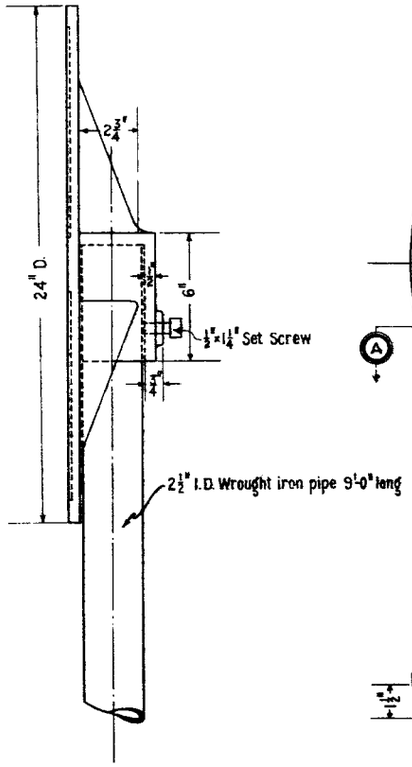

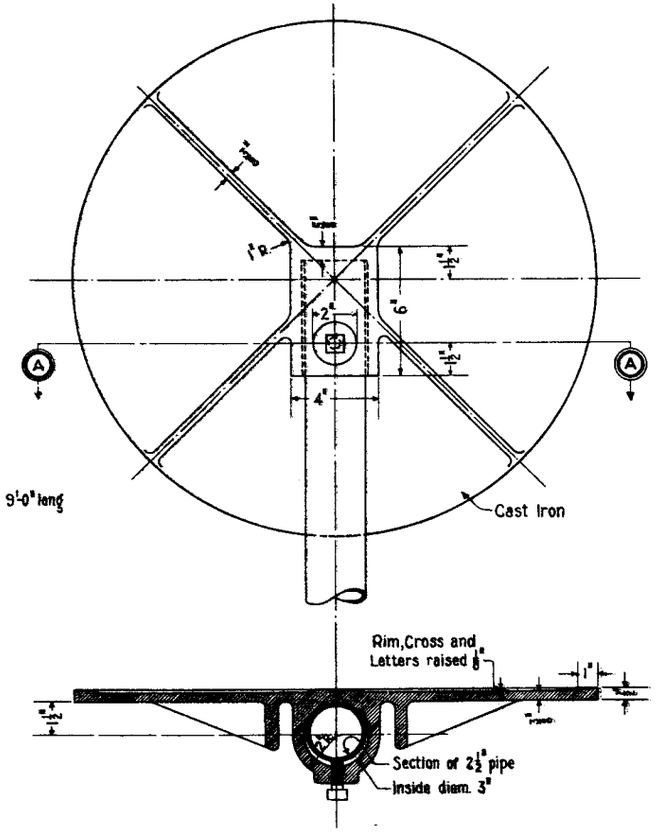

SECTION A-A

NOTE:-

Sign shall be located three hundred feet from crossing; this distance shall be modified as local conditions require.

Face of letters, cross and border shall be painted black on white ground. Back of sign and post shall be painted black.

78310-A

PENNSYLVANIA SYSTEM

STANDARD

APPROACH SIGN

INDICATING RAILROAD AHEAD

OFFICE OF CHIEF ENGINEER, PHILA., PA., JUNE 1920.

Correct: Engineer Standards

Approved: Chief Engineer

downloaded from http://PRR.Railfan.net/standards commercial reproduction prohibited Collection of Rob Schoenberg ©2006