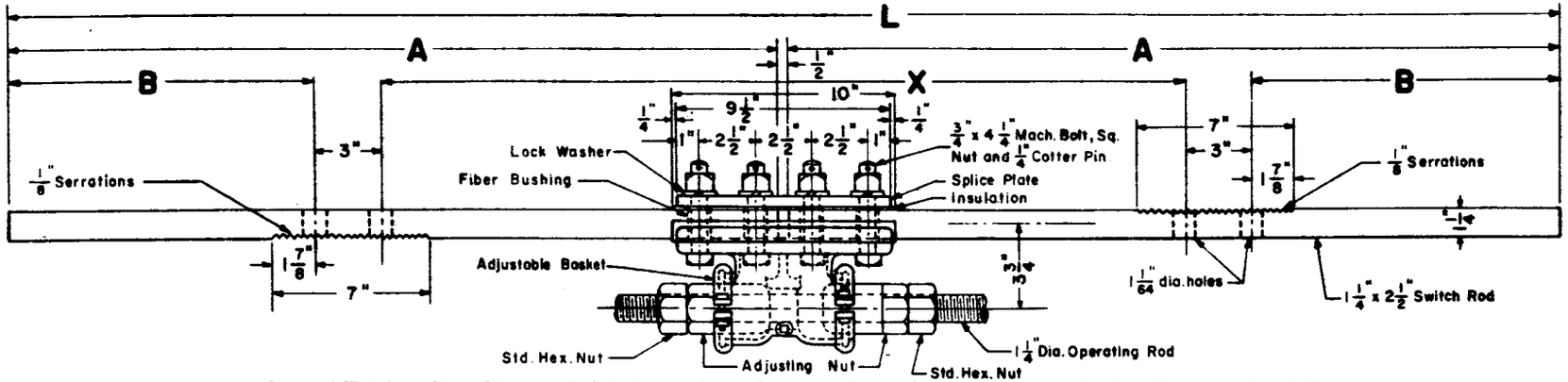

INSULATED SWITCH RODS NO.1 & NO.5 WITH ADJUSTABLE BASKET

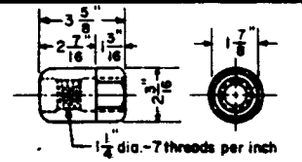

ADJUSTING NUT

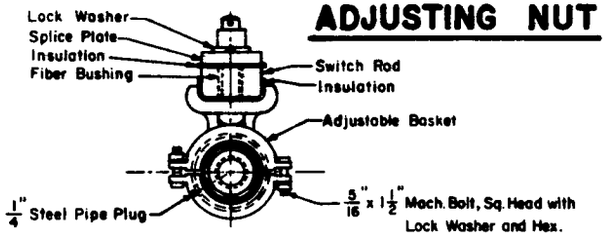

END VIEW

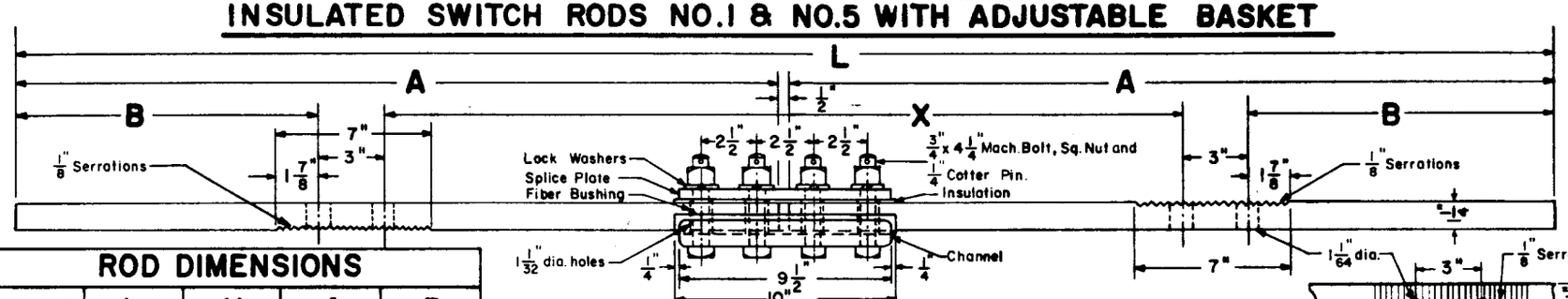

INSULATED SWITCH RODS NO.2, NO.3 & NO.4

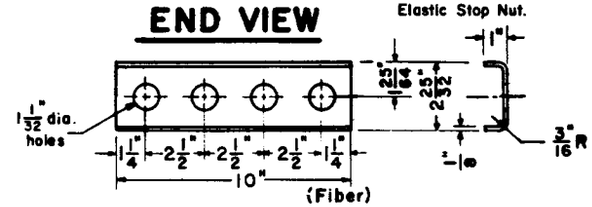

INSULATION FOR CHANNEL

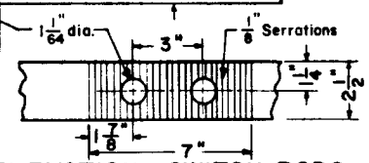

ELEVATION—SWITCH RODS

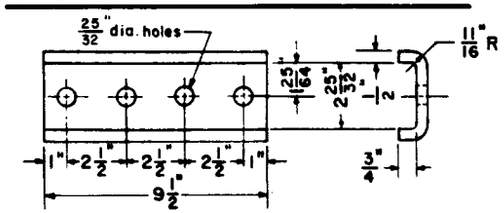

CHANNEL-STEEL

ROD DIMENSIONS				
ROD NO.	L	X	A	B
1	5'-10"	2'-11 13/16"	2'-10 3/4"	14 3/32"
2	5'-10"	2'-11 15/16"	2'-10 3/4"	14 1/32"
3	4'-0"	3'-0 7/16"	1'-11 3/4"	2 25/32"
4	5'-8"	3'-1 7/32"	2'-9 3/4"	12 25/64"
5	5'-8"	3'-2 5/32"	2'-9 3/4"	11 59/64"

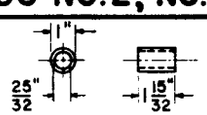

FIBER BUSHING

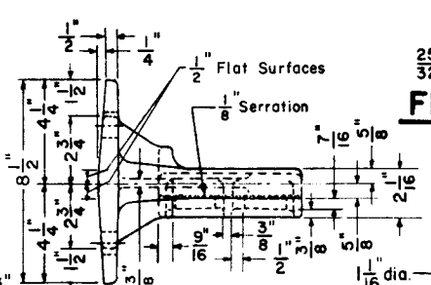

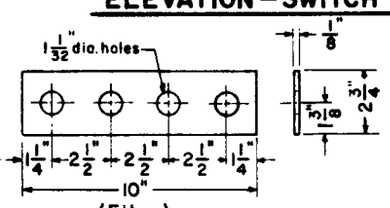

INSULATION PLATE FOR SPLICE PLATE

NOTES

1— All switch rods shall conform to current A.R.E.A. Specifications.

2— All fiber parts shall conform to current A.A.R. Signal Section Manual, Part 58, Specifications 13—Hard Fiber.

3— Each switch rod shall be marked with deeply cut characters, not less than 1/2" high, with rod designation and rail section.

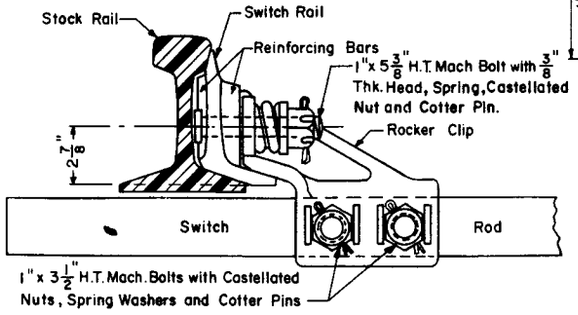

ASSEMBLED ROCKER CLIP

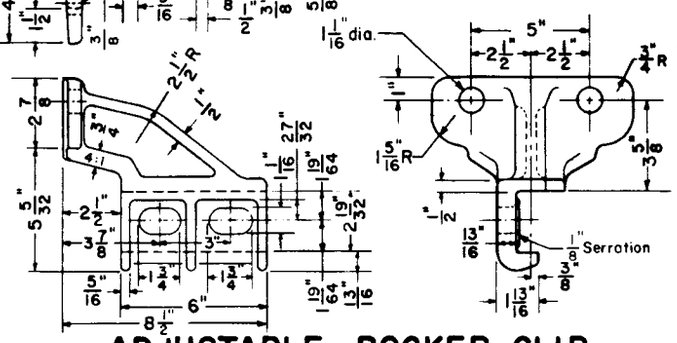

ADJUSTABLE ROCKER CLIP

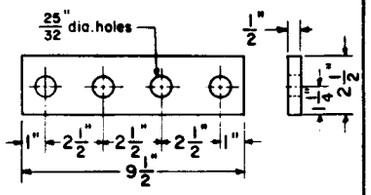

SPLICE PLATE

73514-A

PENN CENTRAL
STANDARD

VERTICAL SWITCH RODS AND ADJUSTABLE ROCKER CLIPS

FOR 39'-0" SWITCH WITH 140 LB. R.E. RAIL

FEBRUARY, 1974

R H Smith — Chief Engineer-Maintenance of Way

J J Gahan — Chief Engineering Officer