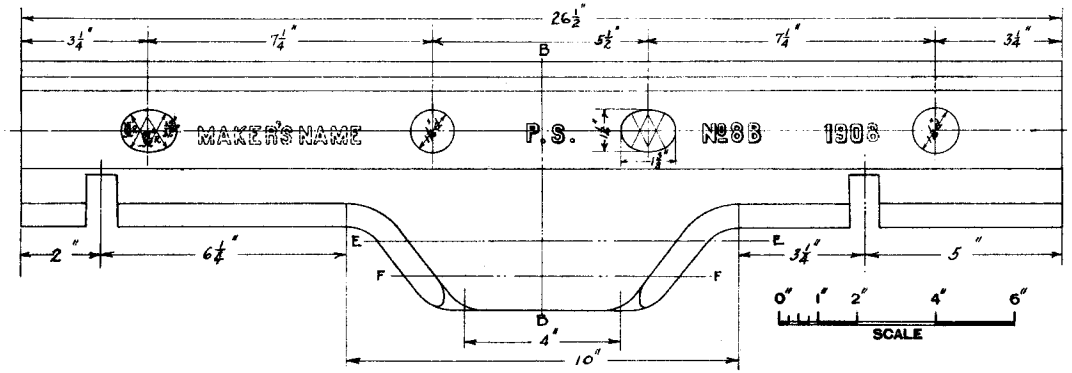

ELEVATION OF SPLICE

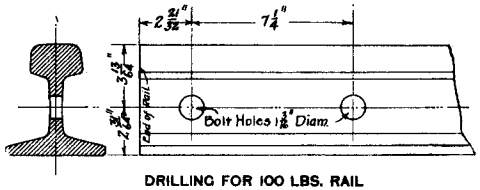

DRILLING FOR 100 LBS. RAIL

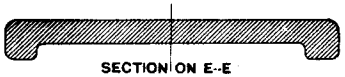

SECTION ON E-E

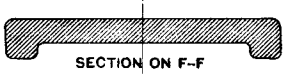

SECTION ON F-F

NOTE:

All rails to conform to Pennsylvania Railroad Specifications for Steel Rails.

Bolt holes in 100 lbs. rails are to be drilled 1 3/16 in. in diameter.

Splices to be marked with manufacturer's name, number of splice and year of manufacture.

Letters and figures to be raised 1/16 inch.

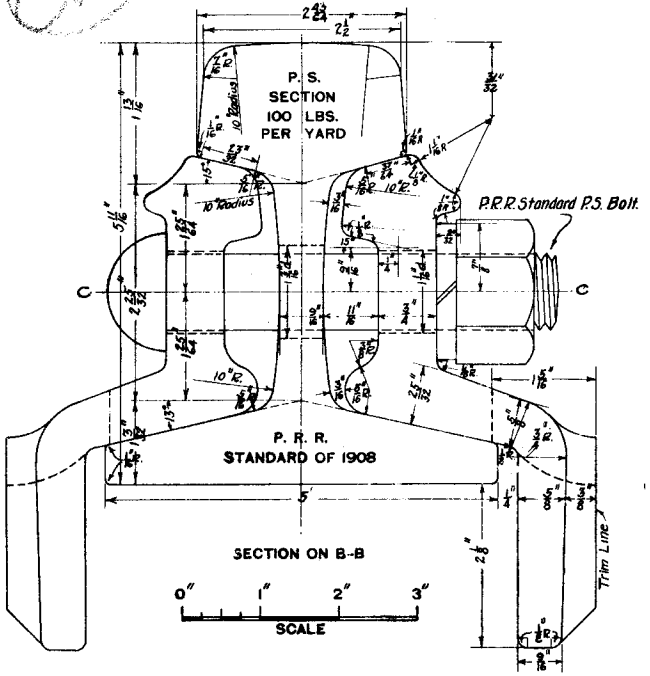

SECTION ON B-B

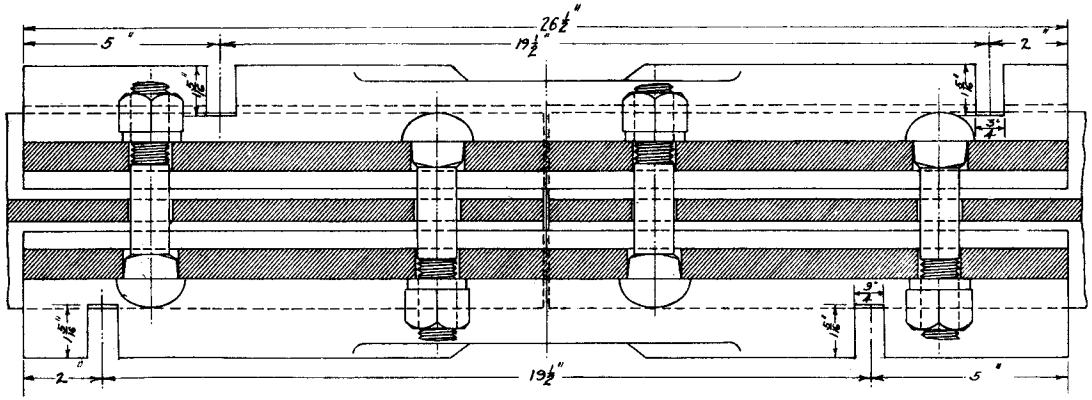

SECTION ON C-C

ORIGINAL ON FILE — OFFICE OF ENGINEER M.W. — PENNSYLVANIA RAILROAD

59482

P. R. R. STANDARD

P.S. Nº 8B FOUR HOLE SPLICE

FOR

100 LBS. RAIL

JUNE, 1911.

Correct: L. Young Jr. — ENGINEER M. W.

Approved: W. J. Richards — CHIEF ENGINEER M. W.

Approved: G. C. Long — GENERAL MANAGER

DRAWN BY R.T.F.
CHECKED BY M.T.

http://PRR.Railfan.net
Collection of Pat McKinney