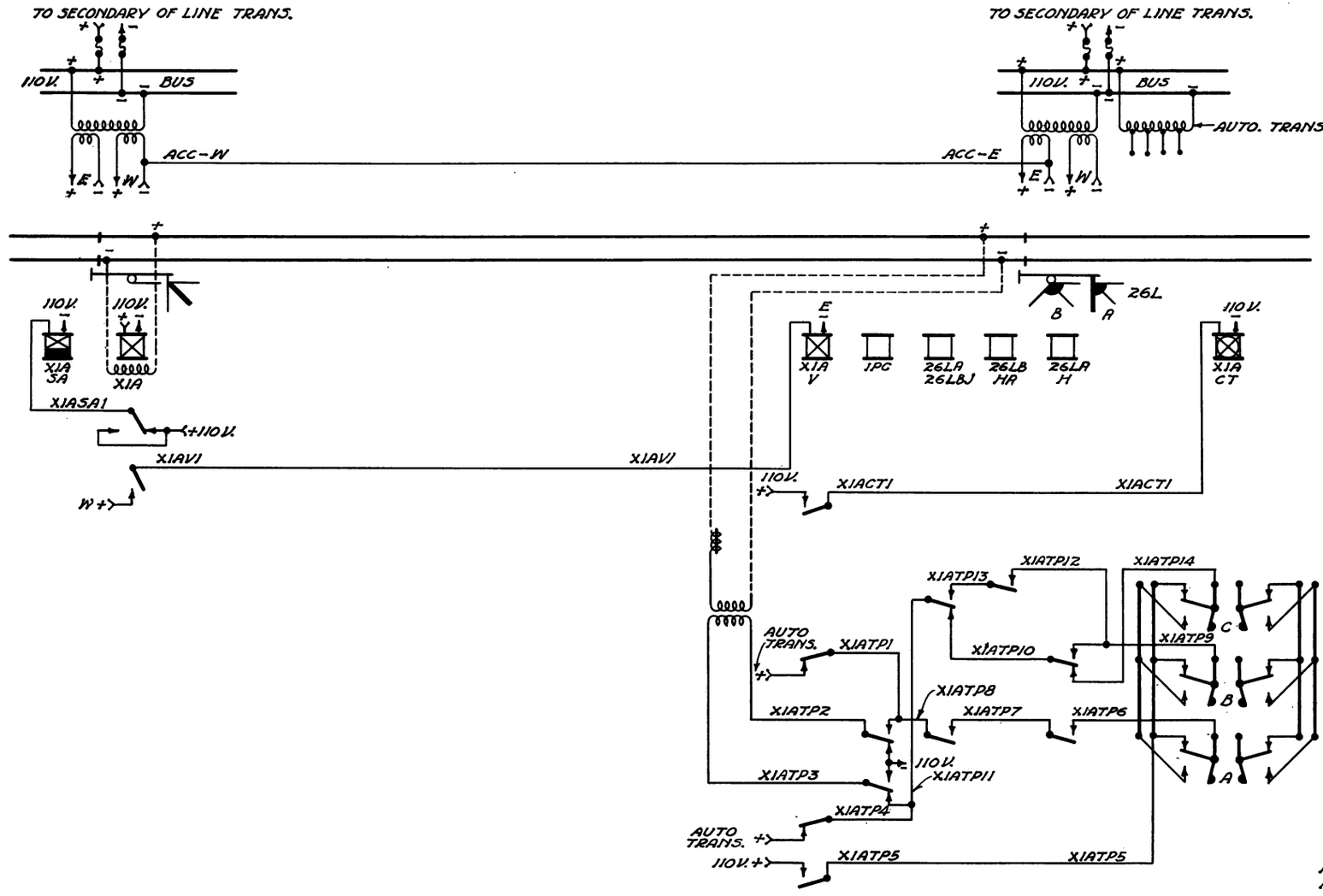

STEAM ROAD

100 CYCLE TRACK CIRCUIT
100 CYCLE CODE

REVISIONS.

3-26-27. CONTACT ON "X1ASA" REMOVED FROM "X1AV" CONTROL.

APPROVED:

SHEET 1 OF 7

S-887

THE PENNSYLVANIA RAILROAD
TYPICAL
CODED TRACK CIRCUITS APPROACHING
HOME INTERLOCKING SIGNALS

OFFICE OF CHIEF SIGNAL ENGINEER,
PHILA., PA., NOV. 16, 1926.

NOT TO SCALE

Approved
Chief Signal Engineer

Approved
Chief Engineer

DOWNLOADED FROM HTTP://PRR.RAILFAN.NET
COLLECTION OF ROB SCHOENBERG
©2023 COMMERCIAL REPRODUCTION PROHIBITED

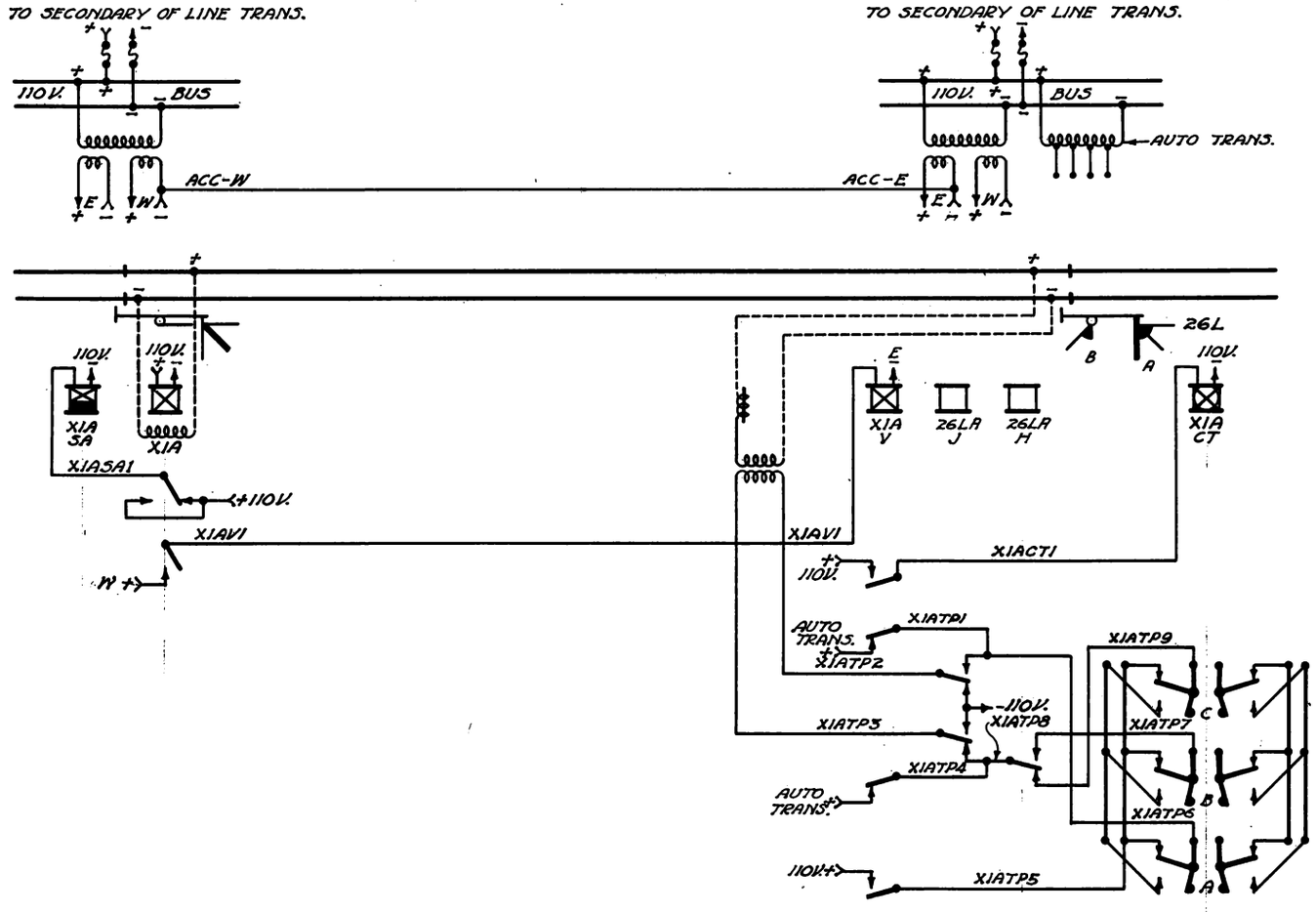

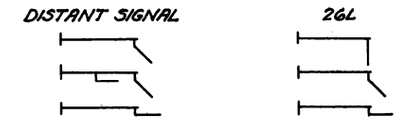

STEAM ROAD
100 CYCLE TRACK CIRCUIT.
100 CYCLE CODE

REVISIONS

3-26-27. CONTACT ON "X1ASA" REMOVED FROM 7 JAN CONTROL.

APPROVED

SHEET 2 OF 7

S-887

THE PENNSYLVANIA RAILROAD
TYPICAL
CODED TRACK CIRCUITS APPROACHING HOME INTERLOCKING SIGNALS

OFFICE OF CHIEF SIGNAL ENGINEER,
PHILA., PA., NOV. 16, 1926

NOT TO SCALE

Approved
Chief Signal Engineer

Approved
Chief Engineer

DOWNLOADED FROM HTTP://PRR.RAILFAN.NET
COLLECTION OF ROB SCHOENBERG
©2023 COMMERCIAL REPRODUCTION PROHIBITED

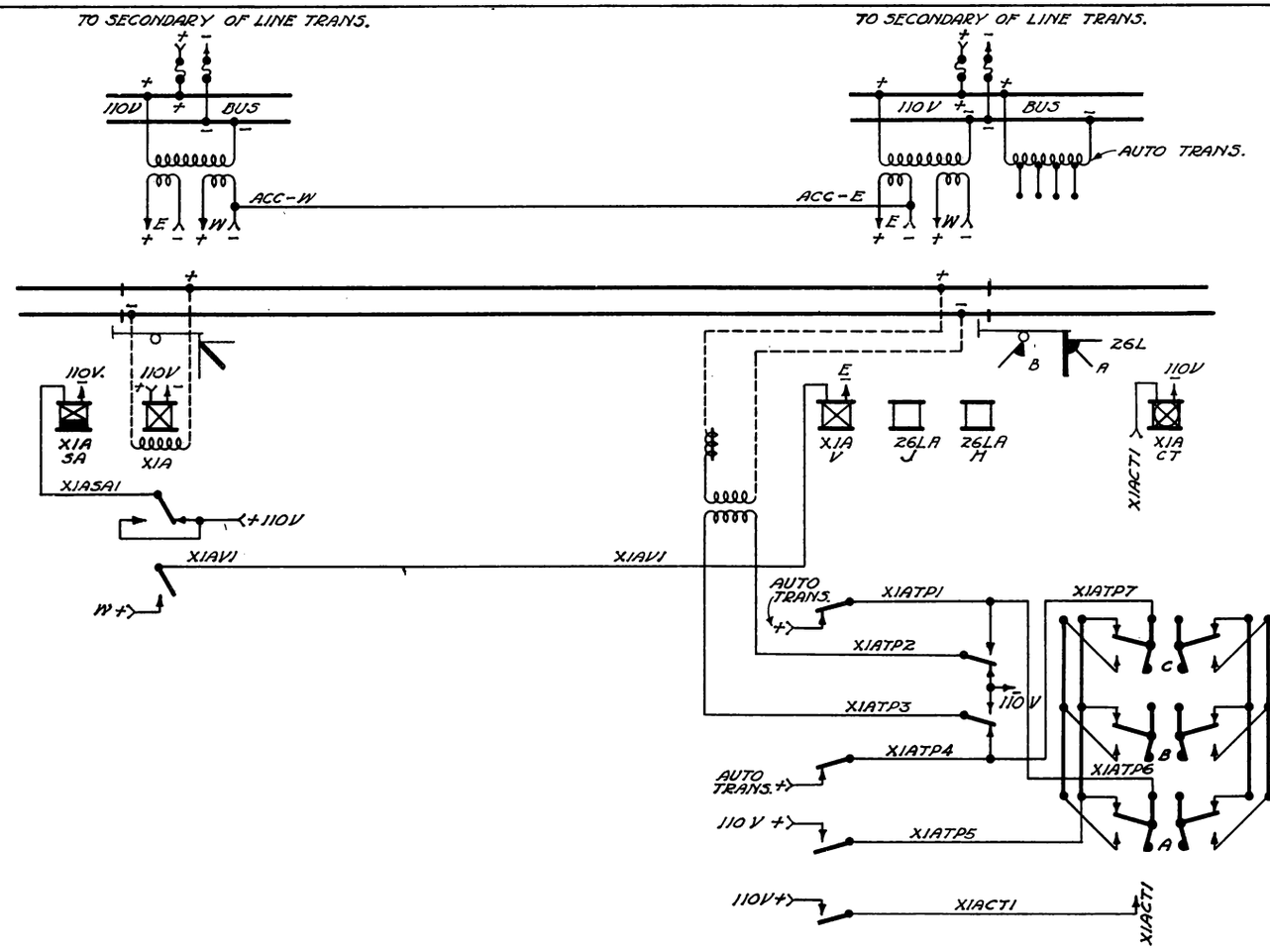

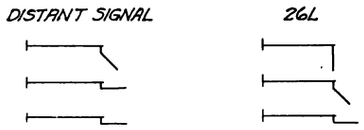

STEAM ROAD

100 CYCLE TRACK CIRCUIT.
100 CYCLE CODE

REVISIONS

3-26-27. CONTACT ON "XIASA" REMOVED FROM "XIAV" CONTROL.

APPROVED

SHEET 3 OF 7

S-887

THE PENNSYLVANIA RAILROAD

TYPICAL

CODED TRACK CIRCUITS APPROACHING HOME INTERLOCKING SIGNALS

OFFICE OF CHIEF SIGNAL ENGINEER, PHILA., PA., NOV. 16, 1926.

NOT TO SCALE

Approved

Chief Signal Engineer

Approved

Chief Engineer

DOWNLOADED FROM HTTP://PRR.RAILFAN.NET

COLLECTION OF ROB SCHOENBERG

©2023 COMMERCIAL REPRODUCTION PROHIBITED

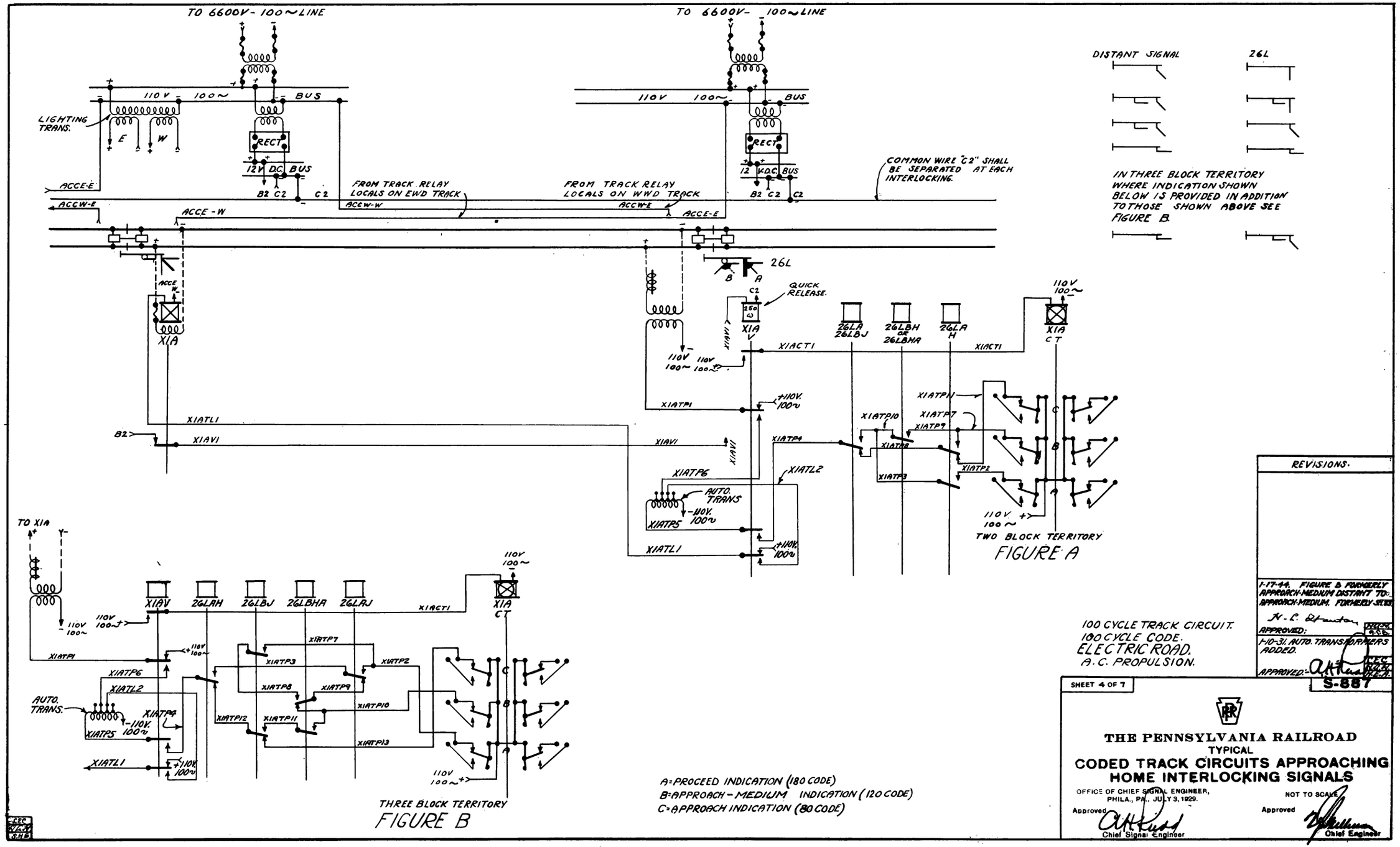

DOWNLOADED FROM HTTP://PRR.RAILFAN.NET
COLLECTION OF ROB SCHOENBERG
©2023 COMMERCIAL REPRODUCTION PROHIBITED

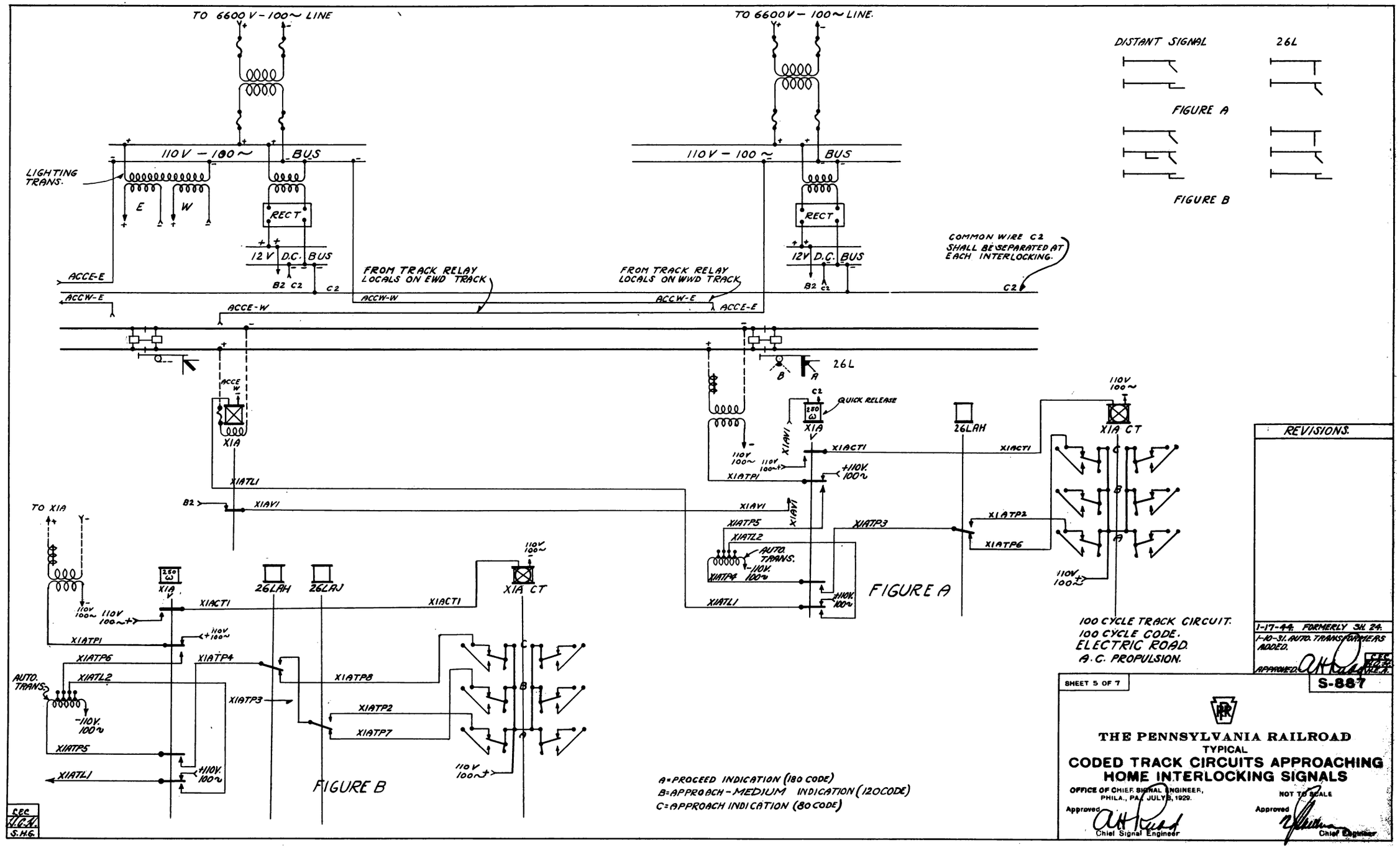

DOWNLOADED FROM HTTP://PRR.RAILFAN.NET
COLLECTION OF ROB SCHOENBERG
©2023 COMMERCIAL REPRODUCTION PROHIBITED

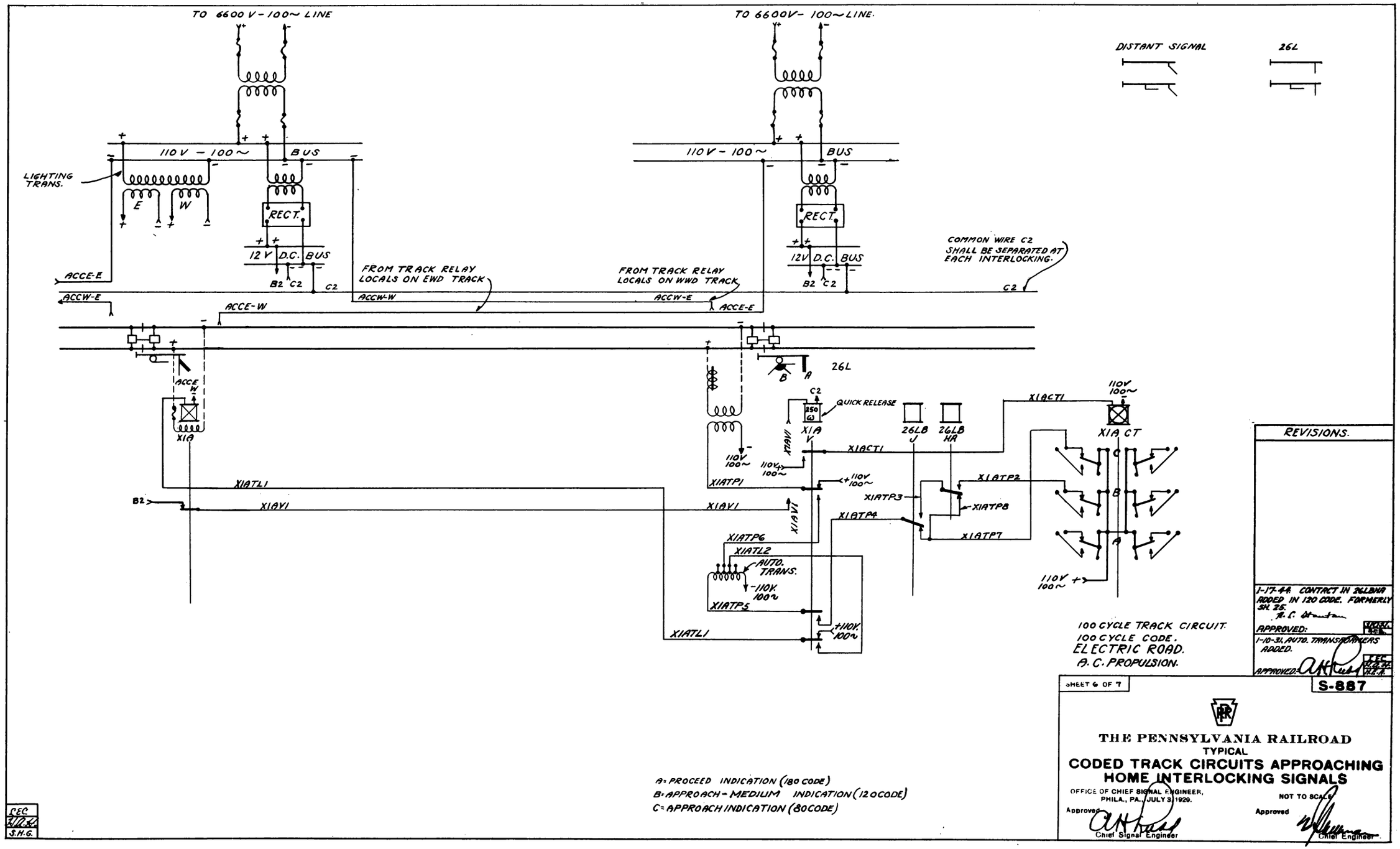

DOWNLOADED FROM HTTP://PRR.RAILFAN.NET
COLLECTION OF ROB SCHOENBERG
©2023 COMMERCIAL REPRODUCTION PROHIBITED

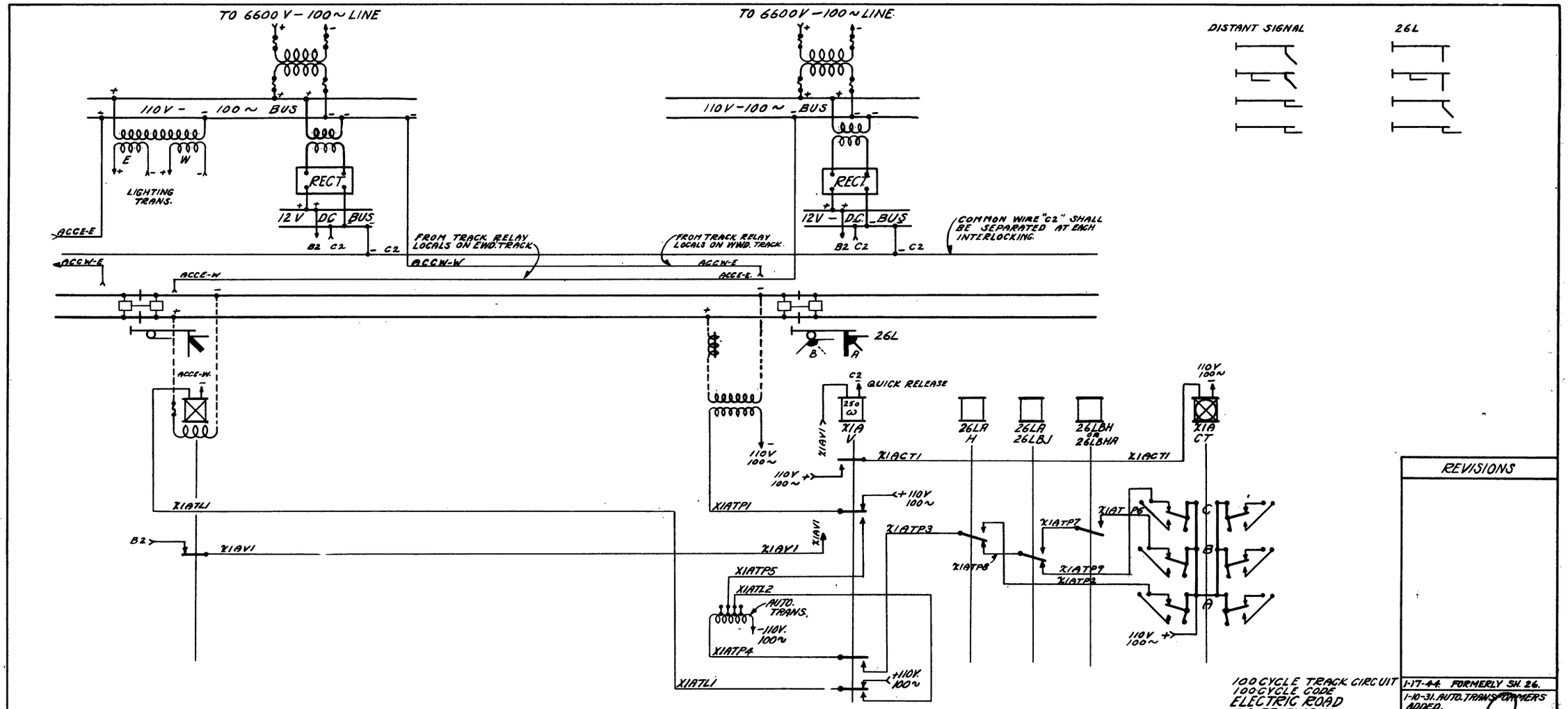

DOWNLOADED FROM HTTP://PRR.RAILFAN.NET
COLLECTION OF ROB SCHOENBERG
©2023 COMMERCIAL REPRODUCTION PROHIBITED