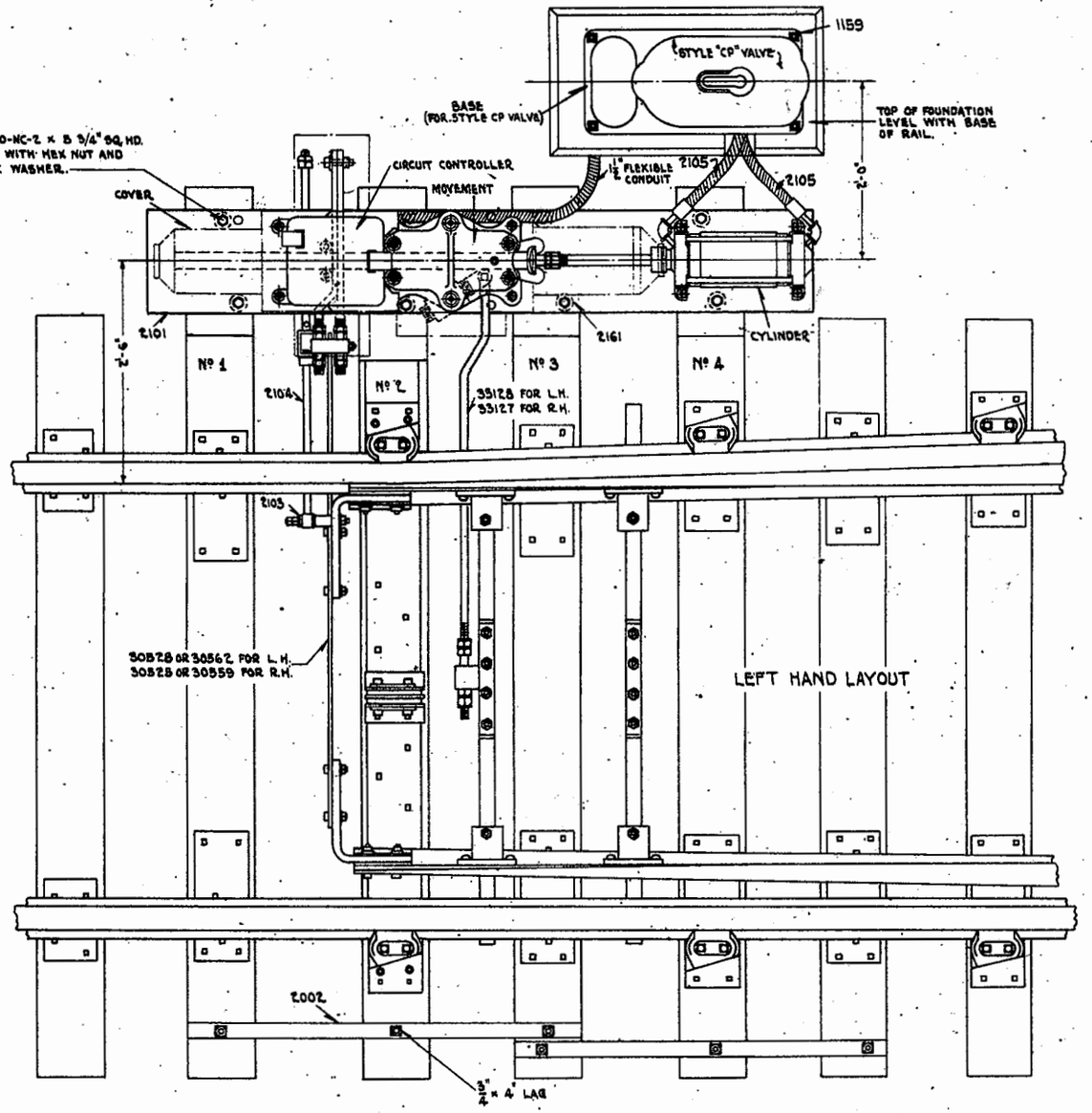

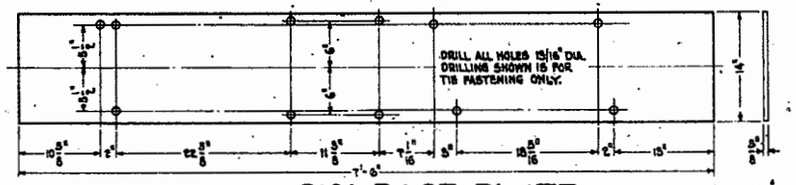

2101 BASE PLATE O.H.S.

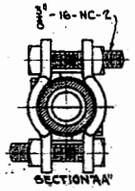

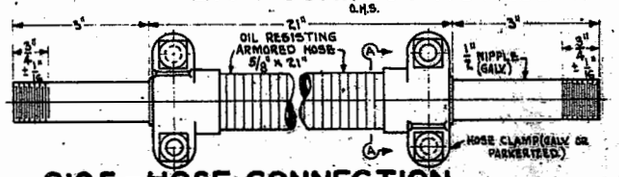

2105 - HOSE CONNECTION

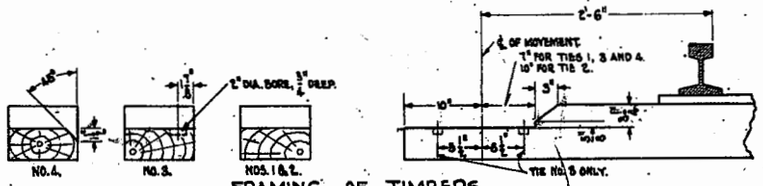

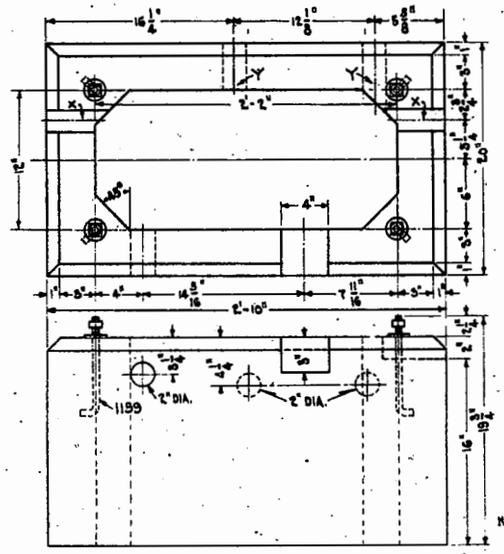

VALVE FOUNDATION LEFT HAND CONCRETE.

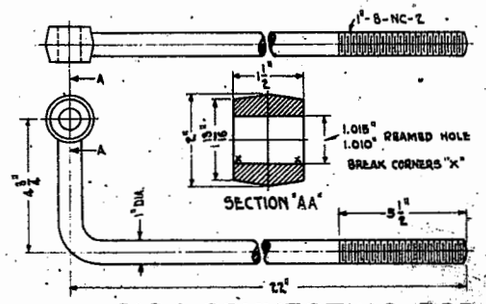

2104 CONNECTING ROD

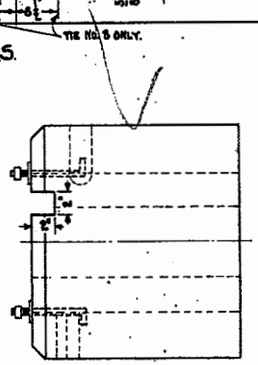

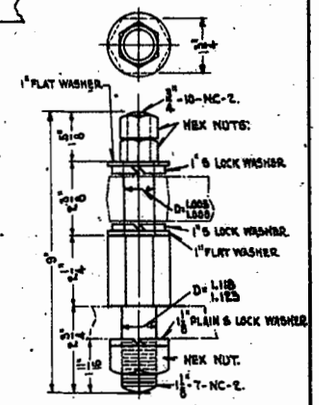

2103 - STUD C.R.S. (FOR POINT DETECTOR)

NOTE:

1. DIMENSIONS OF BOLT HEADS AND NUTS SHALL BE IN ACCORDANCE WITH A.S.A. ROUGH OR SEMI FINISH SIZES.
2. SPRING LOCK WASHERS SHALL MEET THE REQUIREMENTS IN CURRENT ISSUE OF P.R.R. SPEC. C.E.7.
3. SWITCH RODS, GUAGE PLATE AND RAIL BRACES TO BE FURNISHED WITH SWITCH POINTS; FOR DETAILS SEE STANDARD M.W. MATERIAL PLANS.
4. WHERE NO DETAIL REFERENCE IS GIVEN, THE MANUFACTURER'S STANDARD APPARATUS SHALL BE FURNISHED.
5. FOR RIGHT HAND LAYOUT ALL OPENINGS IN VALVE FOUNDATION, EXCEPT THOSE MARKED "X", SHALL BE LOCATED ON OPPOSITE SIDE. OPENINGS MARKED "Y" ARE TO BE PROVIDED ONLY WHERE ONE VALVE OPERATES TWO CYLINDERS.
6. WHEN ORDERING MOVEMENT WITH OR WITHOUT CIRCUIT CONTROLLER OR COMPLETE WITH CYLINDER AND COVER- SPECIFY RIGHT OR LEFT HAND.

REVISIONS
REDRAWN FROM APPROVED PLAN S-210-B, DATED 10-28-26 AND RE ISSUED.

1 SHEET

S-210-C

THE PENNSYLVANIA RAILROAD

STANDARD

LAYOUT

SINGLE SWITCH - TYPE "A-5" MECHANISM

OFFICE OF CHIEF SIGNAL ENGINEER, PHILA., PA. OCT. 11, 1932

Approved — Chief Signal Engineer

Approved — Chief Engineer

downloaded from http://PRR.Railfan.net/signalstandards ©2019 commercial reproduction prohibited Collection of Rob Schoenberg