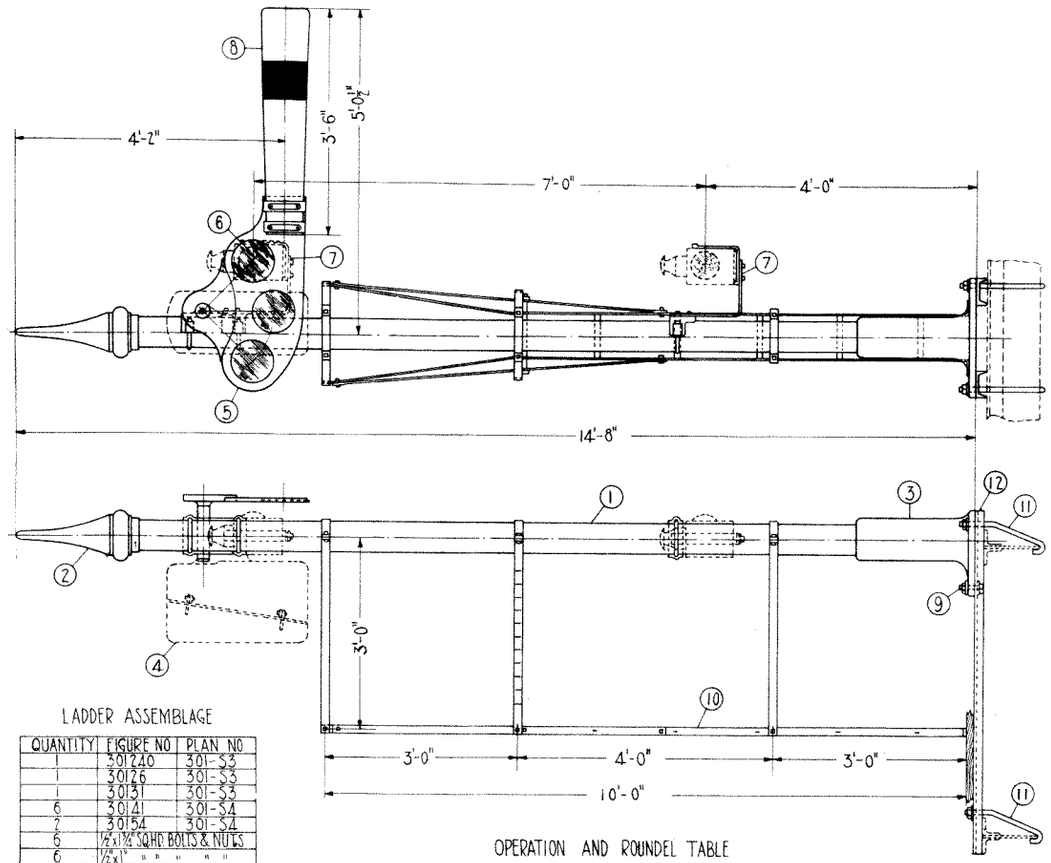

Arrangement on Standard Signal Bridge
2-3-4-5-6-7 and 8 Track

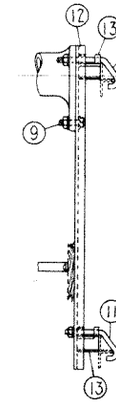

Arrangement on Old Style Signal Bridge
2-3-4-5 and 6 Track

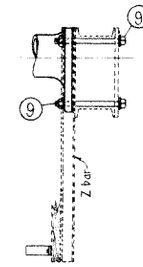

Arrangement on Bracket Post
Plan 303-S1

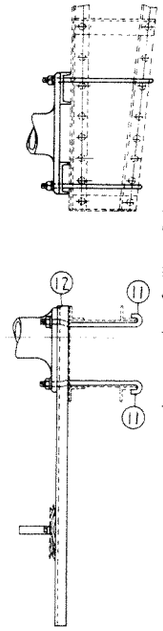

Arrangement on Cantilever Post
Plan 595 B5

3041-SIGNAL COMPLETE
FOR BRIDGE, BRACKET OR CANTILEVER
ASSEMBLAGE

ITEM NO	REQ'D	NAME	FIG	PLAN
1	1	SIGNAL MAST 13'-0" OF 5" PIPE		
2	1	PINNACLE	30115	301-S1
3	1	BASE	30186	301-S5
4	1	MECHANISM COMPLETE FOR WORKING ARM		
5	1	SEMAPHORE SPECTACLE ABSOLUTE	30193	301-S6
		" " PERMISSIVE	301109	301-S8
6		SIGNAL ROUNDELS SEE TABLE BELOW	209 1	209-5
7	2	LAMP BRACKETS	30113	301-S1
8	1	BLADE COMPLETE ABSOLUTE OR PERMISSIVE		236-S3
9		BOLTS 2 FOR BRIDGE 4 FOR BRACKET POST		301-S9
10	1	LADDER COMPLETE SEE LADDER ASSEMBLAGE		
11	4	HOOK BOLTS WHEN USED		301-S9
12	2	CHANNEL IRONS " "		301-S9
13	4	FILLER BLOCKS " "	301129	301-S9

NOTE:-

When ordering Electric Motor Signals specify the voltage and whether alternating or direct current is to be used, if alternating specify the frequency.

When ordering signal complete, give plan, assemblage and operation numbers.

Two (2) inches maximum variation allowed either way on total height of mast.

When no detail reference is shown, the Manufacturer's standard apparatus, if approved by the Purchaser, shall be furnished.

LADDER ASSEMBLAGE

QUANTITY	FIGURE NO	PLAN NO
1	301240	301-S3
1	30126	301-S3
1	30131	301-S3
6	30141	301-S4
2	30154	301-S4
6	½"x¾" SQ HD BOLTS & NUTS	
6	½"x1" " " " "	
2	½"x2" LAG SCREWS	

OPERATION AND ROUNDEL TABLE

OPERATION NO	TYPE OF MECHANISM	OPERATION OF ARM	ROUNDELS
1	ELECTRIC	3 POSITION 0°-45°-90°	1R-1Y-1G
2	"	2 " 0° TO 45°	1R-1Y — 1 SHEET IRON DISC
3	"	2 " 0° TO 90°	2R — 1G
4	"	2 " PERM 0° TO 45°	1R-1Y — 1 SHEET IRON DISCS
5	"	3 " " 0°-45°-90°	1R-1Y-1G

R-RED Y-YELLOW G-GREEN

0" 1" 2"

Redrawn and Revised July 30, 1918.

304-S1

STANDARD
POWER OPERATED MANUAL
BLOCK SIGNAL

DATE JULY 30 1918

Correct: O. N. Rudd, Signal Engineer

Approved: W. G. Lehr, Engineer M. W.

downloaded from http://PRR.Railfan.net
©2004 Commercial reproduction prohibited
collection of Rob Schoenberg