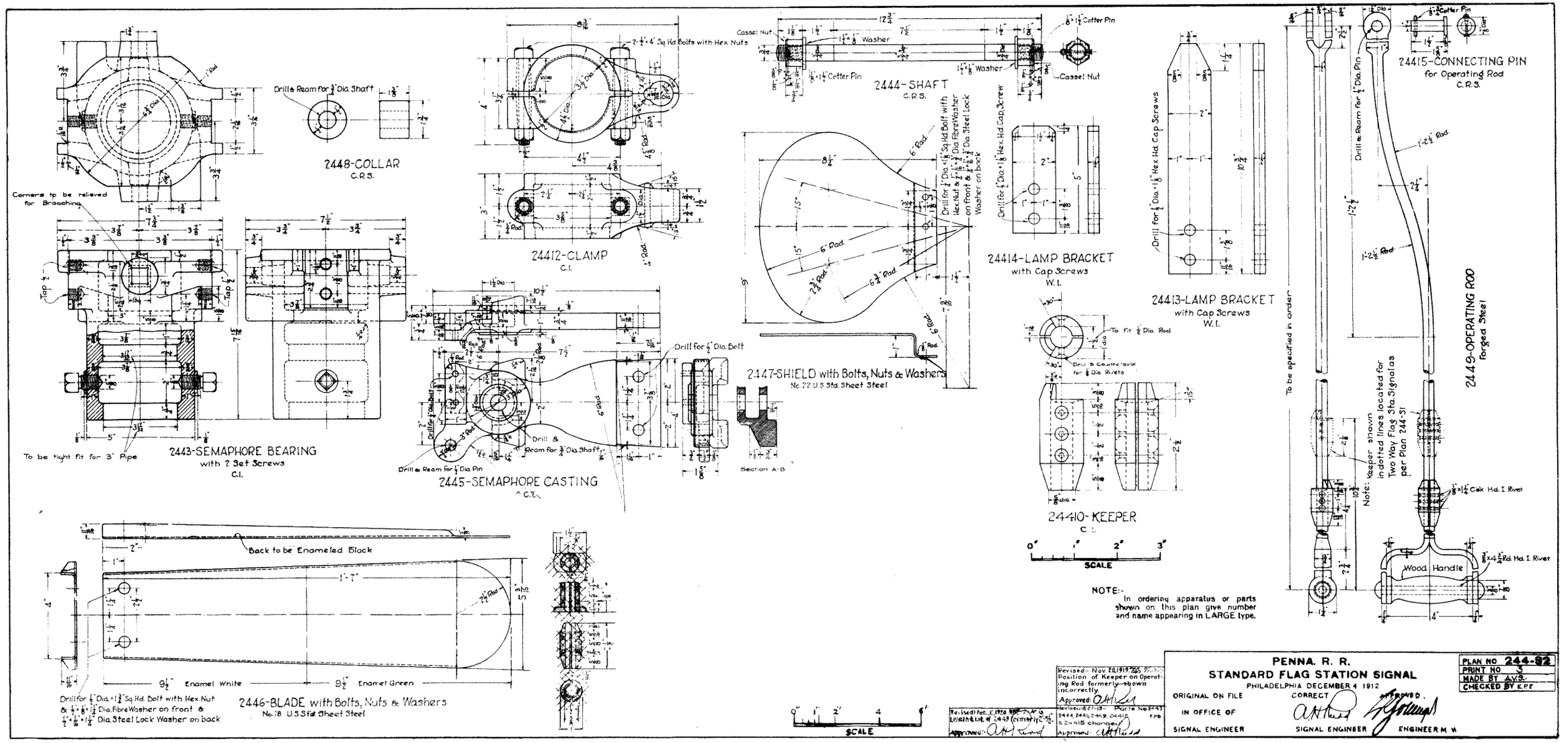

downloaded from http://PRR.Railfan.net
©2004 Commercial reproduction prohibited
collection of Rob Schoenberg