REVISED.
5-7-28.
(L-168-28)

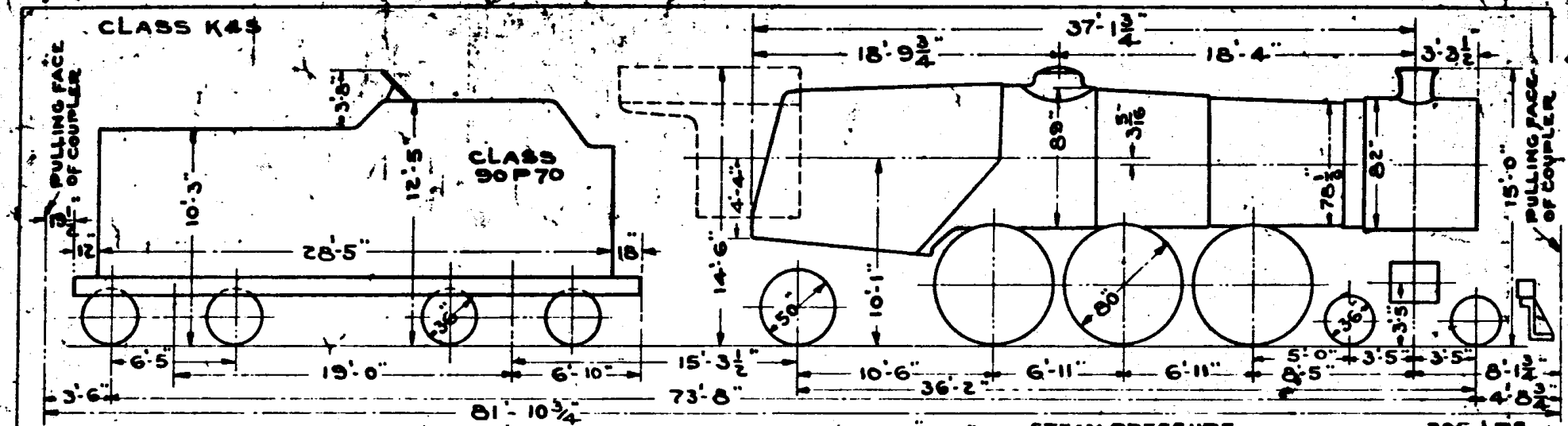

WT. OF TENDER, EMPTY - 82300 LBS.
" " " LOADED - 198400 "
TENDER CAPY - WATER - 9900 GALS
" " COAL - - 33600 LBS.

CYLINDERS	27"x28"
" SPREAD	89"
FLUES, NUMBER OUTSIDE DIA. 2 1/4"	236
" " " " 5 1/2"	40
TUBES " " " 1 1/2"	160
FLUES LENGTH BET. SHEETS	228"
FIREBOX SIZE INSIDE	79 7/8"x126"
HEATING SURFACE, FLUES, EXT.	3736 SQ.FT.
" " INT. SUPERHEATER TUBES	943 " "
" " FIREBOX	305 " "
TOTAL	4984 " "

STEAM PRESSURE	205 LBS.
WT. OF ENGINE EMPTY	274500 "
" " " WORKING ORDER	308890 "
" ON TRUCK	53640 "
" " 1ST. DRIVERS	67550 "
" " 2ND. "	67630 "
" " 3RD. "	66650 "
" " TRAILER	53420 "
" " DRIVERS TOTAL	201830 "

TRAC. E-80611.

RAILROAD DATA EXCHANGE COLLECTION