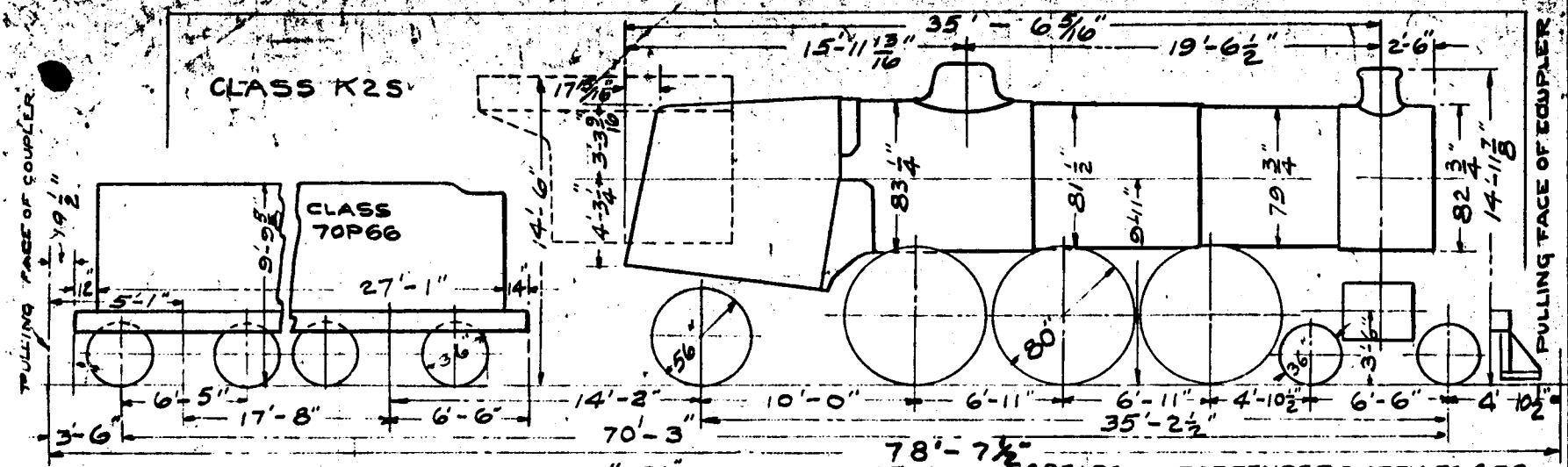

REVISED
5-7-28
(L-168-28)

CYLINDERS,	24"x26"	STEAM PRESSURE	205 LBS.
" SPREAD	88"	WT OF ENG. EMPTY	252500
FLUES, NUMBER, OUTSIDE DIA.	202, 2 1/4"	" OF ENG. W'KG ORDER	283000 LBS
" " "	- 32, 5 1/2"	" ON 1 ST. DRIVERS	62000 "
" LENGTH BET. SHEETS	25 2 5/16"	" " 2 ND	64000 "
FIRE BOX SIZE INSIDE	72"x110 3/4"	" " 3 R	62000 "
HEATING SURFACE, FLUES	3471 SQ.FT.	" " DRIVERS	188000 "
" " SUPERHTR TUBES	791 " "	" " TRUCK	42500 "
" " FIRE BOX	220 " "	" " TRAILER	52500 "
" " TOTAL	4482 " "		

WT. OF TENDER EMPTY 76450
" " LOADED 167650 LBS
TENDER CAP'Y. WATER 7150 GAL.
" " COAL 31600 LBS.

RAILROAD DATA EXCHANGE COLLECTION

TRAC. No. 45639